SunStar®

User's Manual

SF 7400 Series
SF 7500 Series

High-speed Flat Bed Interlock Sewing Machine

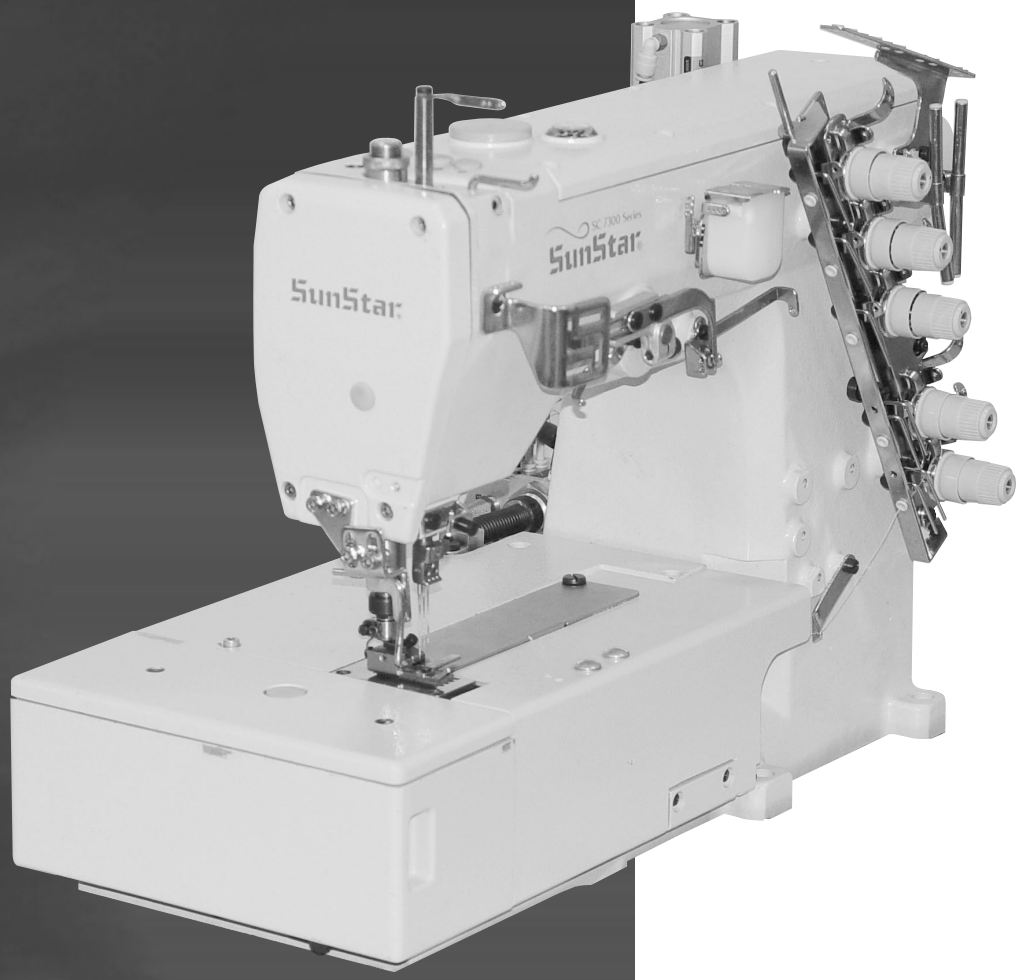

1) For proper use of the machine, thoroughly read this manual before use.
2) Keep this manual in a safe place for future reference in case the machine breaks down.

SUNSTAR MACHINERY CO., LTD.

MME-051110

1. Thank you for purchasing our product. Based on the rich expertise and experience accumulated in industrial sewing machine production, SUNSTAR will manufacture industrial sewing machines, which deliver more diverse functions, high performance, powerful operation, enhanced durability, and more sophisticated design to meet a number of user's needs.
2. Please read this user's manual thoroughly before using the machine. Make sure to properly use the machine to enjoy its full performance.
3. The specifications of the machine are subject to change, aimed to enhance product performance, without prior notice.
4. This product is designed, manufactured, and sold as an industrial sewing machine. It should not be used for other than industrial purpose.

SunStar SUNSTAR MACHINERY CO., LTD.

Classification of Pattern Types

Symbol of Series
SUNSTAR
Flat Bed Chain Stitch M/C

Bed Type & No. of Needle	
75	Flat Bed-3Needle
74	Flat Bed-2Needle

Main Motor	
C	Fortuna Ⅳ
N	Fortuna Ⅲ
M	Clutch Motor

Top Cover Thread	
0	Without Top Cover Thread
1	With Top Cover Thread

Needle Distance	
32	3.2mm
40	4.0mm
48	4.8mm
56	5.6mm
64	6.4mm

MODEL	SF 7500 / C
SPEC.	1 56 G
DEVICE	UT-A / □□/□□...

Device	
UT-A	Under Thread Trimmer [2-Solenoid Valve Type]
UT-B	Under Thread Trimmer [3-Solenoid Valve Type]

Attachment (Option)	
ST-F	Top Cover Thread Trimmer(Flat Bed)
CO	Covering Guide
HE	Hemming Guide
WF	Walking Foot
ATF	Auto Tape Feeder
TL	See Through Light for Hemming
SL	Compact Spot light
TC	Needle Thread Clamp
BN	Binder

Shape of Stitch Plate	
G	Standard
L	For long stitch (longer than 2.5mm)
S	For short stitch (shorter than 1.8mm)

CONTENTS

1

Machine Safety Regulations

Safety instructions on this manual are defined as Danger, Warning and Caution.
If you do not follow the instructoins, physical injuries and machine damages might be occurred.

Danger : This indication should be observed definitely. If not, there will be a danger during the installation, conveyance and maintenance of the machine.
Warning : When you follow this indication, injuries from the machine can be prevented.
Caution : When you follow this indication, error on the machine can be prevented.

1) Transporting machine Danger	Those in charge of transporting the machine should have a full understanding of the machine. The following indications should be followed when the machine is being transported. ⓐ More than 2 people must transport the machine. ⓑ To prevent accidents from occurring during transportation, wipe off the oil on the machine compeletely.
2) Installing machine Warning	The machine may not work properly or breakdown, if installed in certain places, Install the machine where the following qualifications agree. ⓐ Remove the package and wrappings from the top. Take special notice on the nails on the wooden boxes. ⓑ Dust and moisture stains and rusts the machine. Install an airconditioner and clean the machine regularly. ⓒ Keep the machine out of the sun. ⓓ Leave sufficient space of more than 50cm behind, and on the right and left side of the machine for repairing. ⓔ EXPLOSION HAZARDS Do not operate in explosive atmospheres. To avoid explosion, do not operate this machine in an explosive atomsphere including a place where large quantities of aerosol spray product are being used or where oxygen is being administered unless it has been specifically certified for such operation. ⓕ The machine is not provided with a local lighting due to the feature of machine. Therefore the illumination of the working area must be fulfilled by end user.
3) Repairing machine Caution	When the machine needs to be repaired, only the assigned troubleshooting engineer educated at the company should take charge. ⓐ Before cleaning or repairing the machine, turn off the main power and wait 4 minutes till the machine is completely out of power. ⓑ Not any of the machine specifications or parts should be changed without consulting the company. Such changes may make the operation dangerous. ⓒ Spare parts produced by the company should only be used for replacements. ⓓ Put all the safety covers back on the machine after the machine has been repaired.

4) Operating machine

Warning

SF 7500 Series is made to sew patterns on fabrics and other similar materials for industrial use. Follow the following indications when operating the machine.

ⓐ Read through this manual carefully and completely before operating the machine.
ⓑ Wear proper clothes for work.
ⓒ When the machine is in operation, do not bring your hands or body near the moving parts of the machine, such as needle, looper, spreader, thread take-up lever and pulley, etc.
ⓓ Keep the covers and safety plates on the machine during operation.
ⓔ Be sure to connect the earthing conductor.
ⓕ Turn off the main power and check if the switch is turned "off" before opening electric boxes such as the control box.
ⓖ Stop the machine before threading the needle or checking after work.
ⓗ Do not step on the pedal when turning the power on.
ⓘ Do not operate the machine with any cooling fan blocked.
The air-filter on control box must be cleaned once a week.
ⓙ If possible, install the machine away from source of strong electrical noise such as high frequency welding machines

[Warning]
Keep cover in place before operating, turn off power before inspecting or adjusting in order to prevent physical injury from belt.

5) Safety devices

Caution

ⓐ Safety label : Cautions during machine operation
ⓑ, ⓒ Thread take-up lever cover : A device designed to prevent any physical contact with thread take-up lever
ⓓ Belt cover: A device designed to prevent the body and clothes from getting jammed by the moto
ⓔ Finger guard : A device to prevent contact between fingers and needles
ⓕ Safety plate: Eye-protecting device

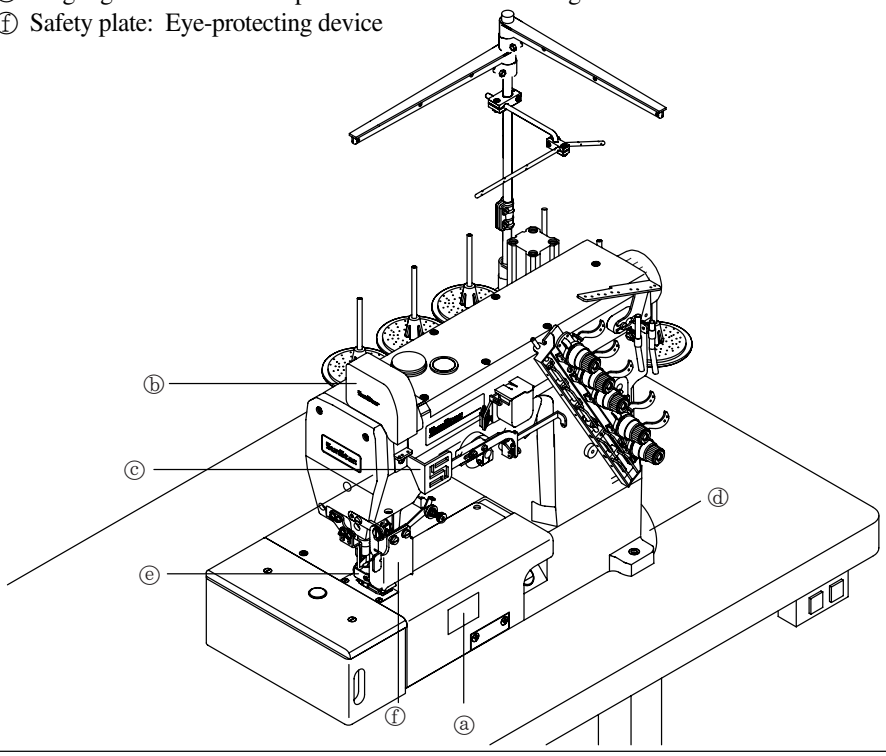

6) Caution mark position

Caution mark is attached on the machine for safety.
When you operate the machine, follow the directions on the mark.

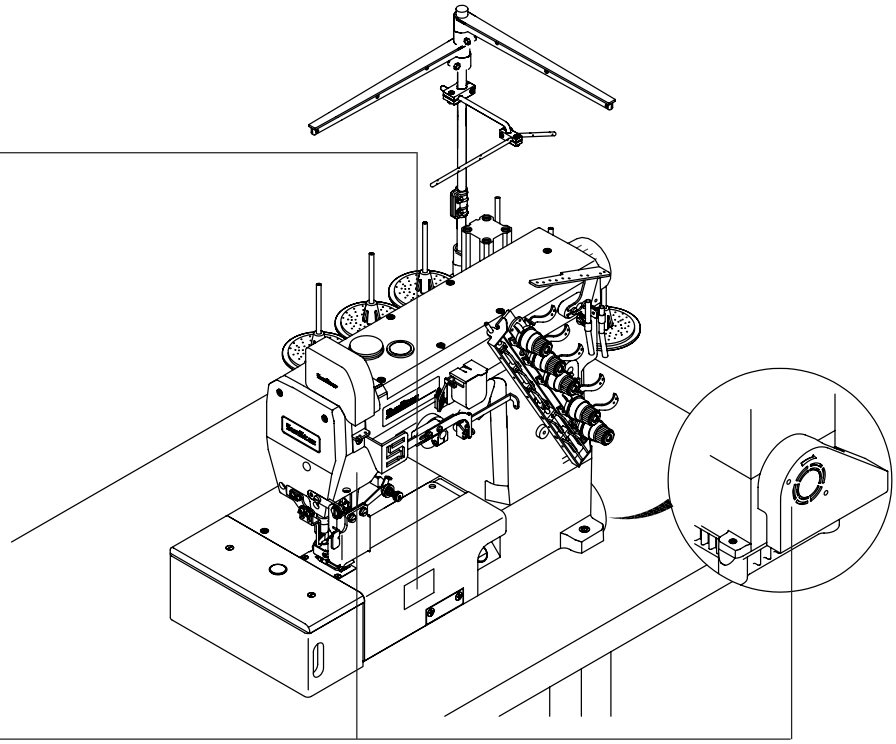

[Figure 1]

7) Contents of marks

Caution

(1)

(2)

2

Names of machine parts

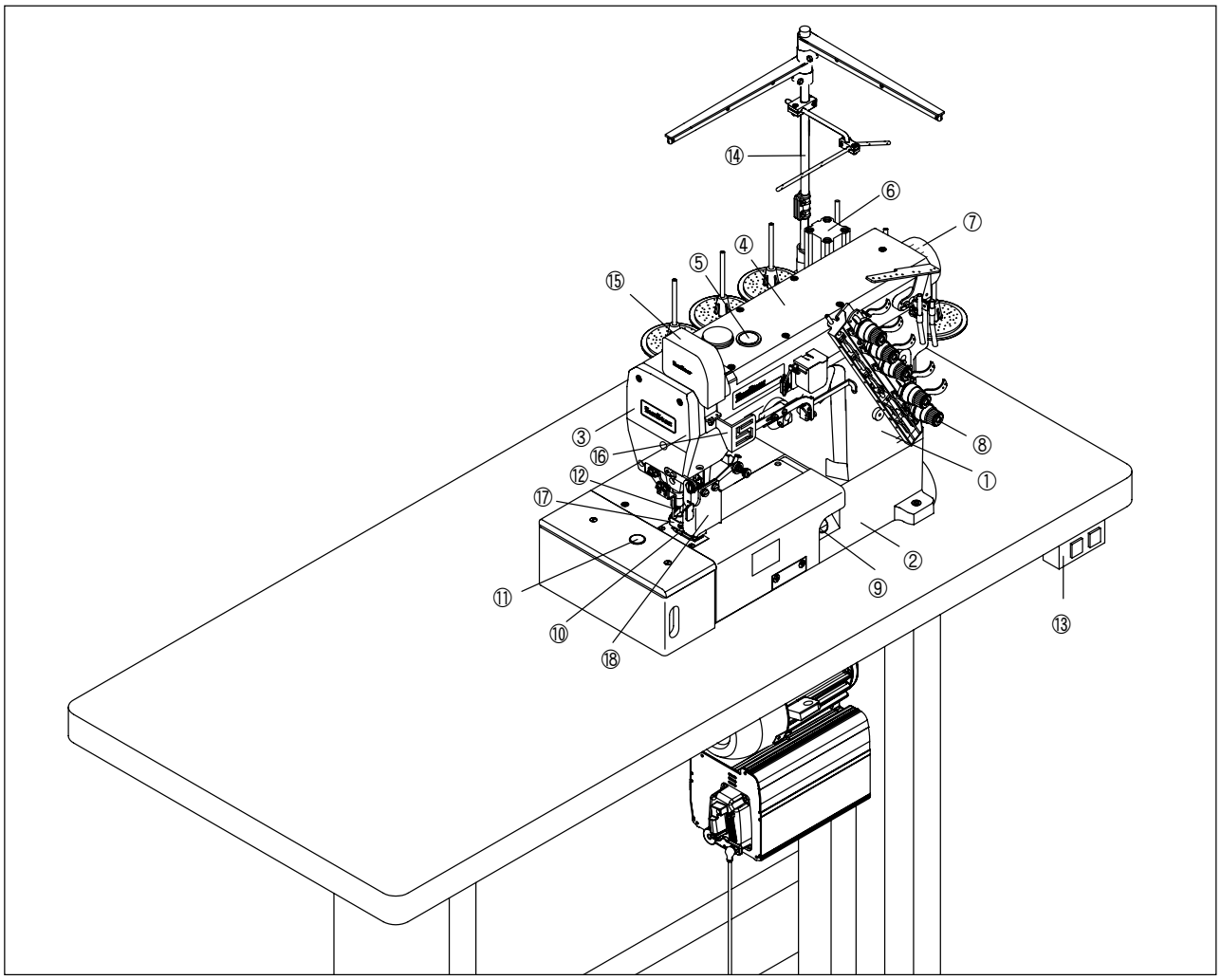

[Figure 2]

① Arm
② Bed
③ Face plate
④ Upper cap
⑤ Oil window
⑥ Knee-lifting cylinder
⑦ Upper shaft pulley
⑧ Thread-adjusting device
⑨ Oil gauge
⑩ Presser foot
⑪ Main feed regulating button
⑫ Air wiper
⑬ Power switch
⑭ Bobbin stand

Safety devices

⑮ Thread guide cover for needle thread
⑯ Thread take-up lever cover for needle thread
⑰ Finger guard
⑱ Safety plate

3

Specifications

Model	SF 7500 Series
Description	High-speed Flat Bed Three-Needle Interlock Sewing Machine
Stitch Type	ISO 406,407,602,605
For use	General seaming of knitted materials
Sewing speed	Max. 6000 s.p.m (In the case of on-and-off operation)
Stitch length	1.4~3.6mm
	Stitches per inch: 7~18; The number of stitches per 30mm: 8~21
Needle	UY×128GAS No. 65 ~ No. 90(Standard : No. 70)
Needle clearance	2-needle: 3.2, 4.0, 4.8, 5.6, 6 mm
	3-needle: 5.6, 6.4 mm
Needle bar stroke	31mm
Lifting of presser foot	Max. 8.0 mm (7 mm if equipped with a spreader)
Feed Regulation	Push-Button type
Differential ratio	Max. Normal Differential Ratio ⟶ 1 : 2
	Max. Reverse Differential Ratio ⟶ 1: 0.7
Differential Feed Regulation	Adjusting screw and adjusting lever
Lubrication	Automatic lubrication by oil pump
Oil used	All-purpose machine oil
Oil fan capacity	1100CC

4

Installation

1) Installation of table

(1) Types of table

A. Supporting Board Type

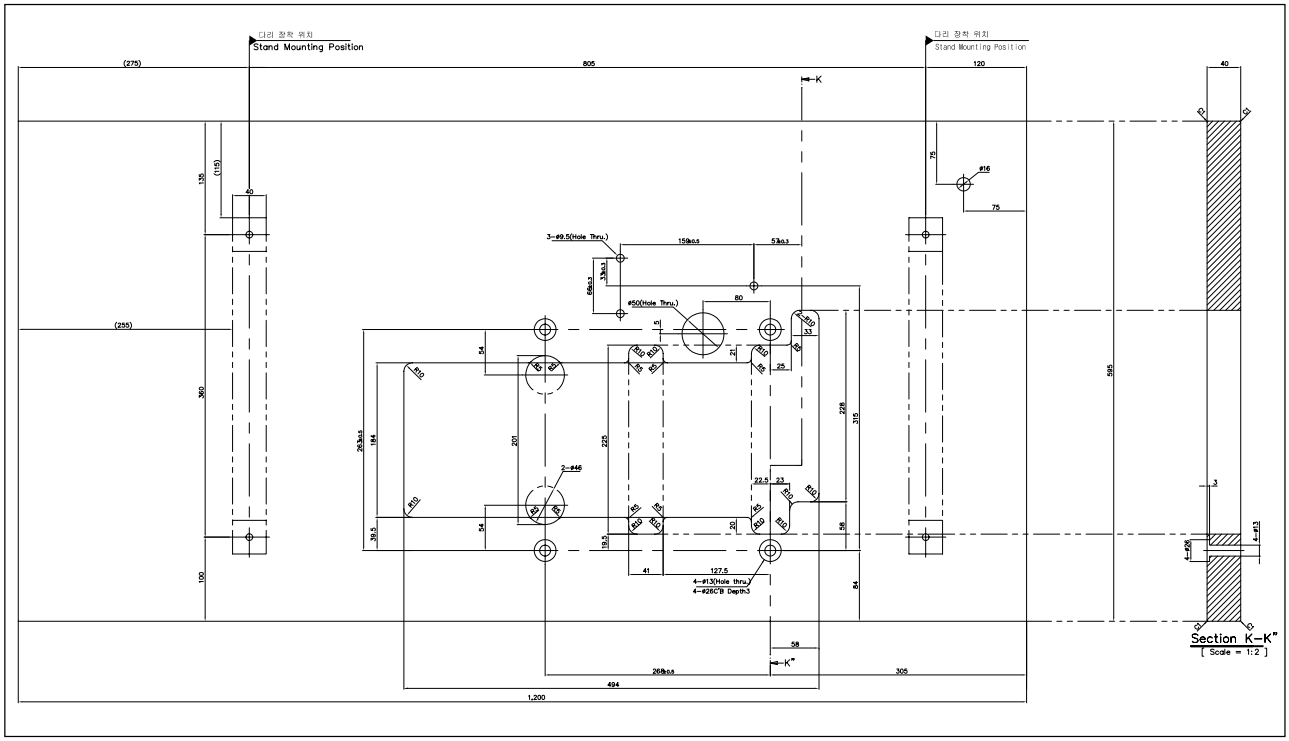

[Figure 3]

(2) Installation of Supporting Board

Install the sewing machine as shown in [Fig. 4].

Insert screws into the bed supporting board to fix the bed on the table. Place rubber cushions on top of screws for safety.

Then install the sewing machine.

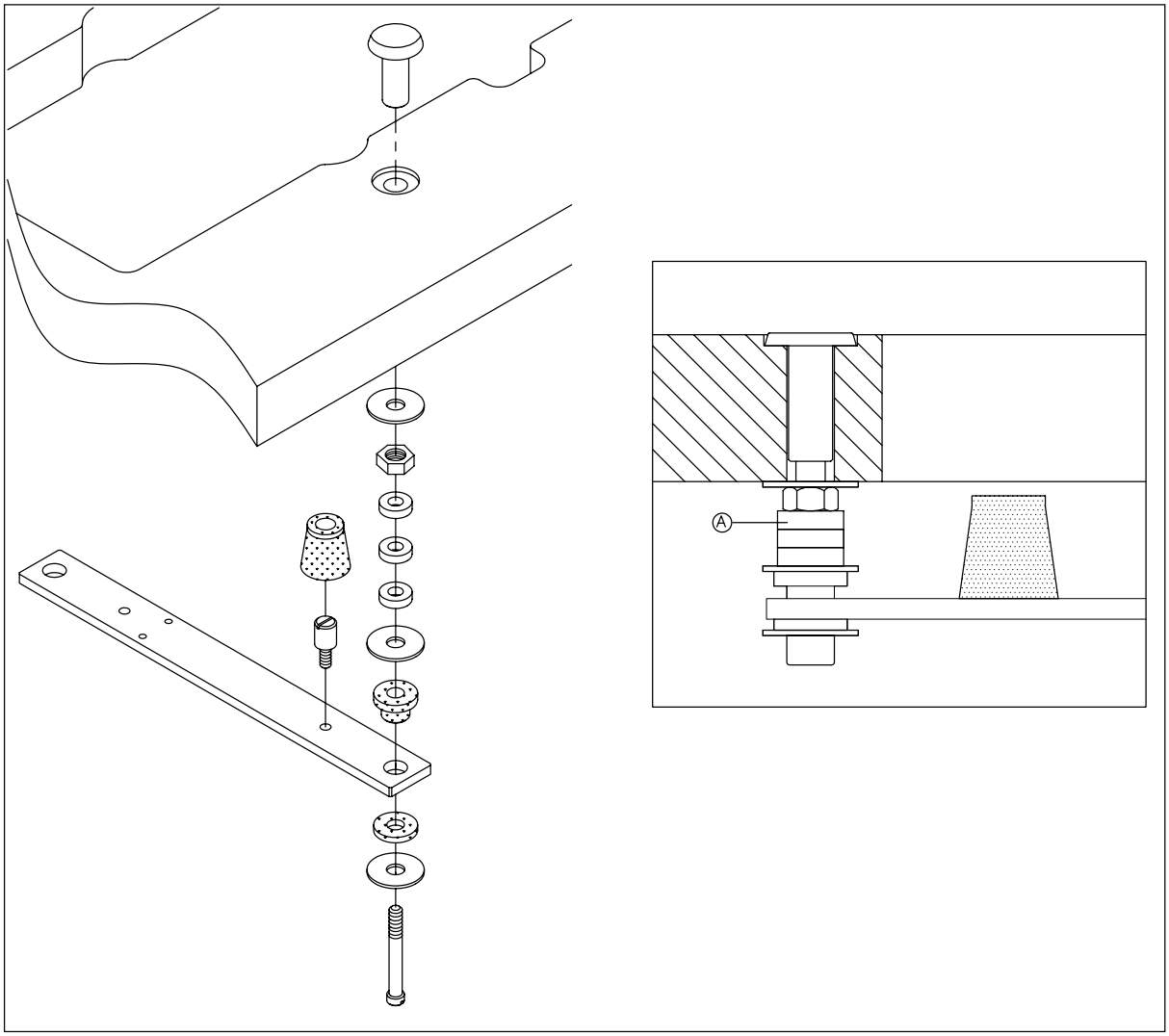

[Figure 4]

※ Required Number of Spacer A

SF 7500 Series

Thickness of Table	Number of A
40mm	3×4 = 12
45mm	2×4 = 8
50mm	1×4 = 4

2) Installation of motor and belt

Use a 3-Phase, 2-Pole, 550W(3/4 HP) clutch motor and M-type V-belt for the machine.

Start the pedal. When the motor pulley begins to move to the left, adjust the position of the motor so that the centers of the motor pulley and the M/C pulley meet with each other.

Diameter. of Motor Pulley(mm)	s.p.m of machine	
	50Hz	60Hz
75	3,200	3,900
80	3,400	4,100
85	3,600	4,400
90	3,900	4,700
100	4,300	5,200
110	4,700	5,700
120	5,100	6,200
130	5,500	6,700

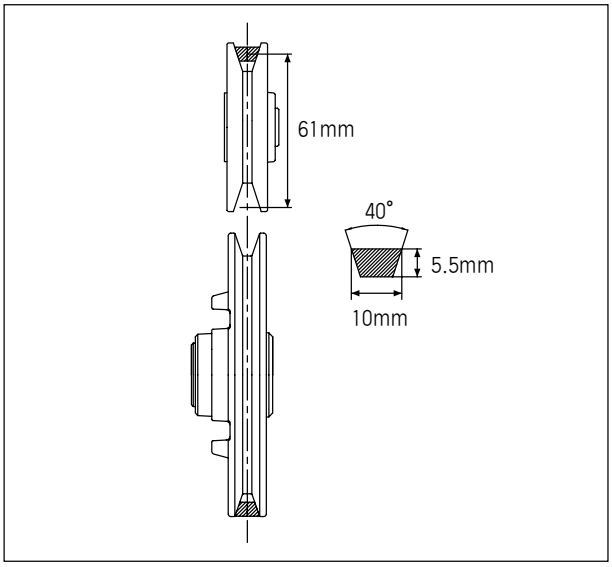

[Figure 5]

※ The diameter of pulleys in the market is generally set with a 5 mm clearance.

3) Adjustment of belt tension

[Warning]
Be sure to turn the power switch off before adjusting belt tension.

Turn the screw④ of the motor③ around. Adjust the belt ① to go in approximately 10~20mm when its center portion is pushed with a finger. (Refer to figure 6)

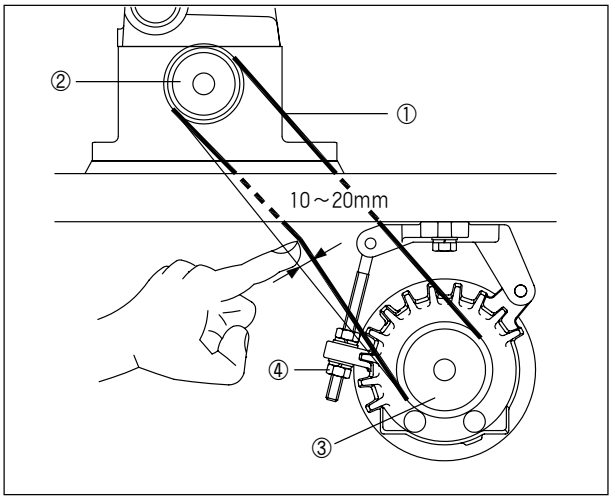

[Figure 6]

4) Attachment of Belt Cover

[Warning]
Always install the belt cover for safety.

Fasten the belt cover (upper)① with a screw② as shown in figure 7.

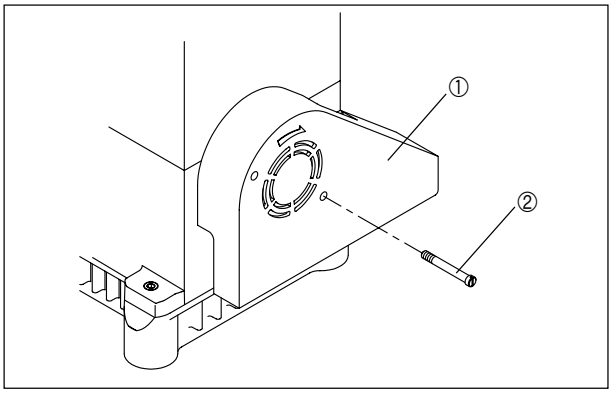

[Figure 7]

5) Installing cover for needle bar thread guide

As illustrated in the figure, fix the cover② for needle bar thread guide onto the arm with two screws①.

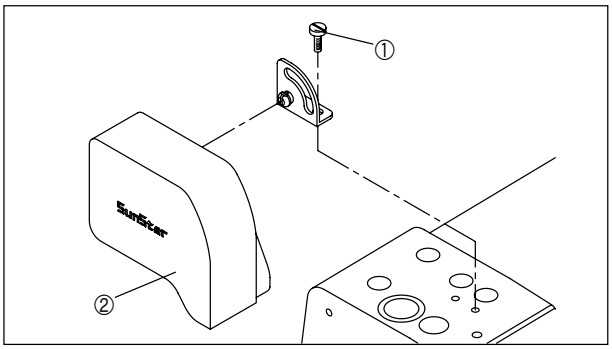

[Figure 8]

6) Installation of thread guide plate

Use screws ① (2 each) to mount the thread guide plate ② onto the arm as described below in the figure.

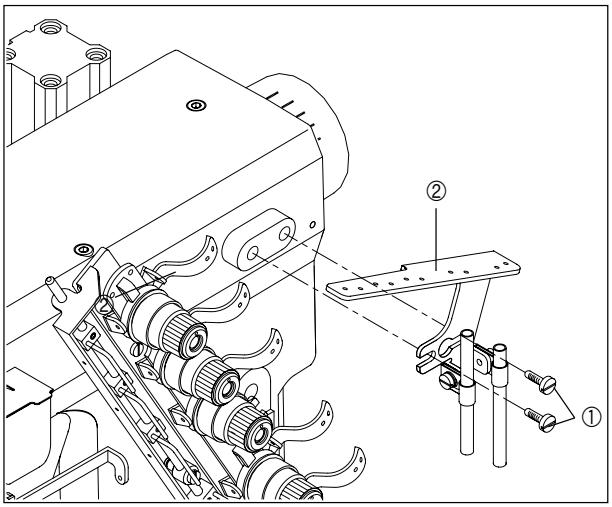

[Figure 9]

5

Sewing speed and rotating direction of pulley

The maximum speed of the sewing machine is 6,000 s.p.m, and 4,000 s.p.m for commercial use.

To ensure durability, run the sewing machine at 4,000 s.p.m for 200 hours of operation (or 1 month) when using the machine for the first time.

As shown in figure 10, the rotating direction of the lower shaft pulley① and upper shaft pulley② is clockwise.

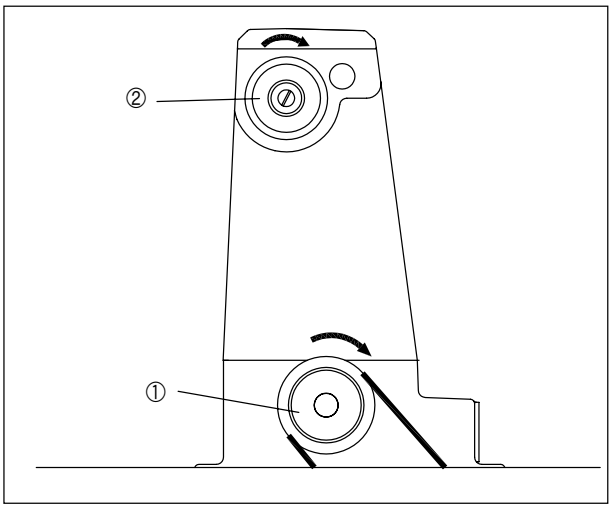

[Figure 10]

6

Lubrication

[Warning]
Be sure to turn the power switch off before oiling

1) Lubricating oil

Use industrial-purpose lubricating oil supplied by SunStar or SF oil by YANASE for this particular type of sewing machine.

[Caution]
Do not put foreign materials into the lubricating oil. It will degrade the lubricating oil and cause mechanical breakdowns.

2) Supplying oil

The sewing machine is not oiled when shipped out from the factory. To ensure trouble-free use of the sewing machine, open the upper rubber lid ① and supply oil to the upper line of the oil gauge ③.

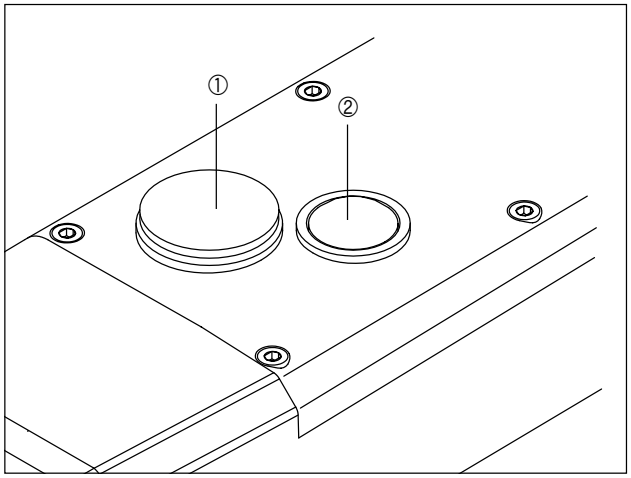

[Figure 11]

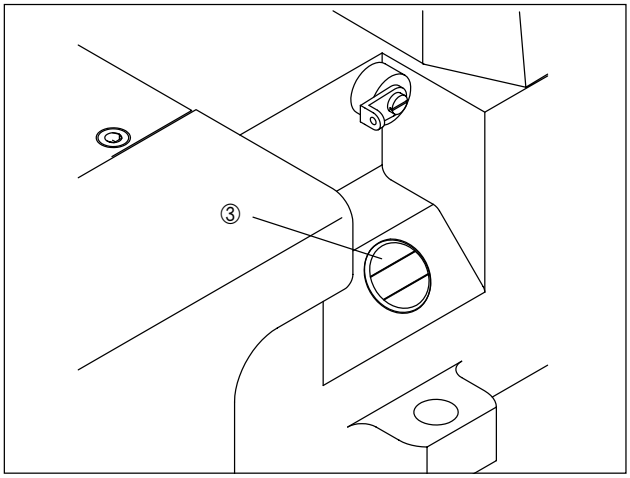

[Figure 12]

[Caution]
Too little oil may cause mechanical breakdowns and too much may degrade the quality of sewing materials. Be sure to adjust the amount of oil appropriately.

3) Oil Gauge and Oil Window

Always check the oil gauge ③ before starting the machine. Supply oil if the remaining oil comes short of the lower line of the gauge.

When operating the machine, check the flow of the oil through oil window ②.

4) Oil change

To ensure durability of the sewing machine, be sure to change oil after 250 hours of initial operation.

① Separate the V belt from the motor pulley, and then separate the sewing machine from the table.

② Loosen [the oil release screw①] to release the lubricant inside.
Make sure that the V belt is not smeared by oil.

③ Release the lubricant and tightly fasten [the oil release screw①].

④ See "2)「Supplying oil」" to supply new oil.

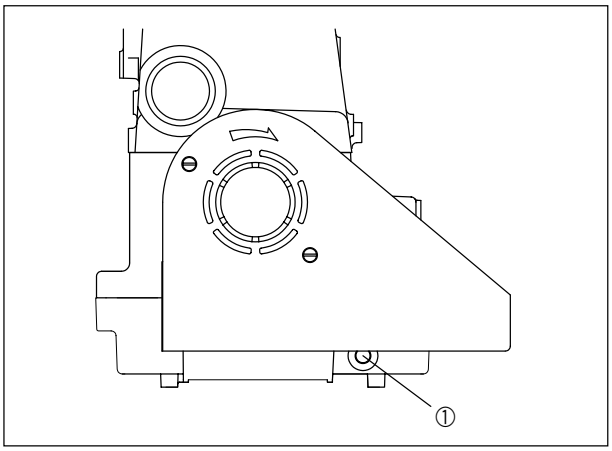

[Figure 13]

5) Cleaning the oil filter

Oil will not supply smoothly if dust gets built up in oil filter ②. Check the oil filter once every six months.

Check the oil filter through the oil window if there is no or only little amount of oil being supplied.

Before checking the oil filter, remove the oil filter cover ③.

Clean dust build-ups inside the oil filter.

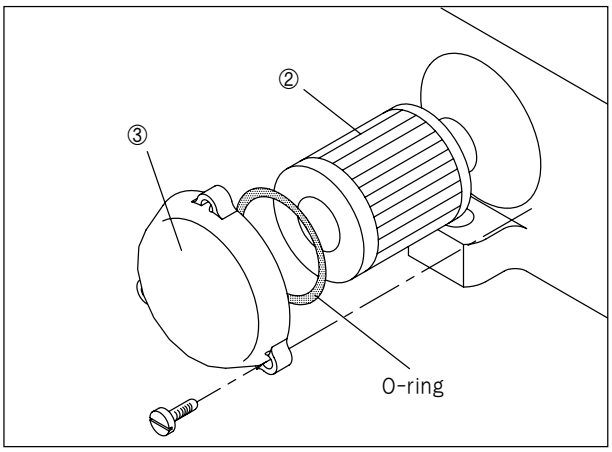

[Figure 14]

[Caution]
When removing the oil filter cover, be sure to prevent the remaining oil in the oil filter from leaking.

7

Standard adjustments of the sewing machine

1) Needle used

This sewing machine uses UY × 128GAS needles.
Needles come in various size. Select the most appropriate needle depending on the thickness or the type of sewing materials.

Japanese size	9	10	11	12	13	14
Metric size	65	70	75	80	85	90

2) Installation of needle

[Warning]
Turn the power switch off before installing a needle.

Use a needle driver to loosen the screw ①, and remove the old needle with tweezers. (Figure 15)
Set the needle groove to completely face back, and raise the needle to the groove tip of the needle holder ②. Then fasten the screw ① firmly. (Figure 16, 17)

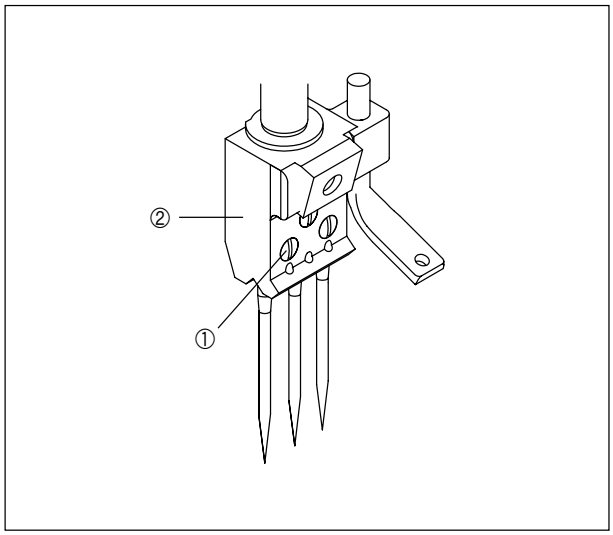

[Figure 15]

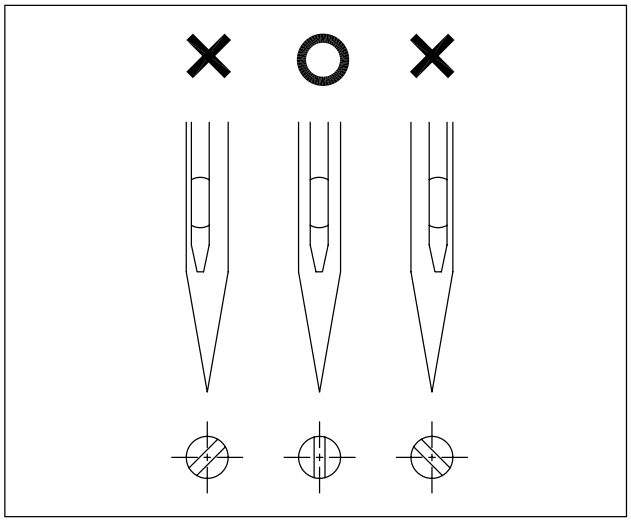

[Figure 16]

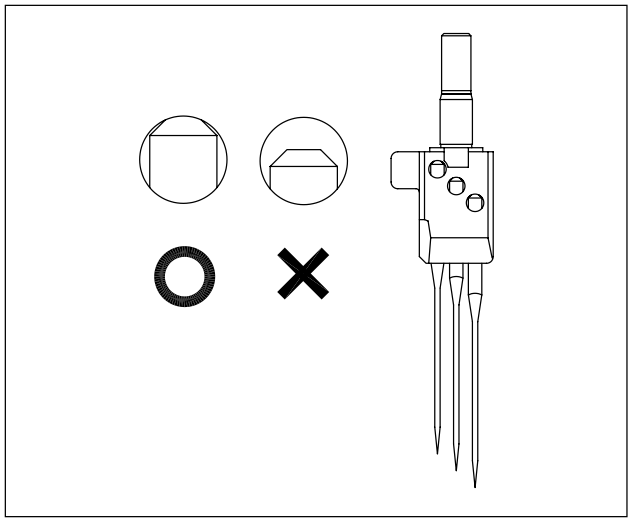

[Figure 17]

3) Threading

Insert the thread as shown in figure 18 for 3-needle sewing machine.

If treading is not done correctly, stitches may skip, threads may break or tension may be uneven. A, B and C stand for each needle thread, D for top cover thread and E for looper thread.

Except for the second needle thread in the case of 2-needle sewing machine, refer to the above instructions for threading.

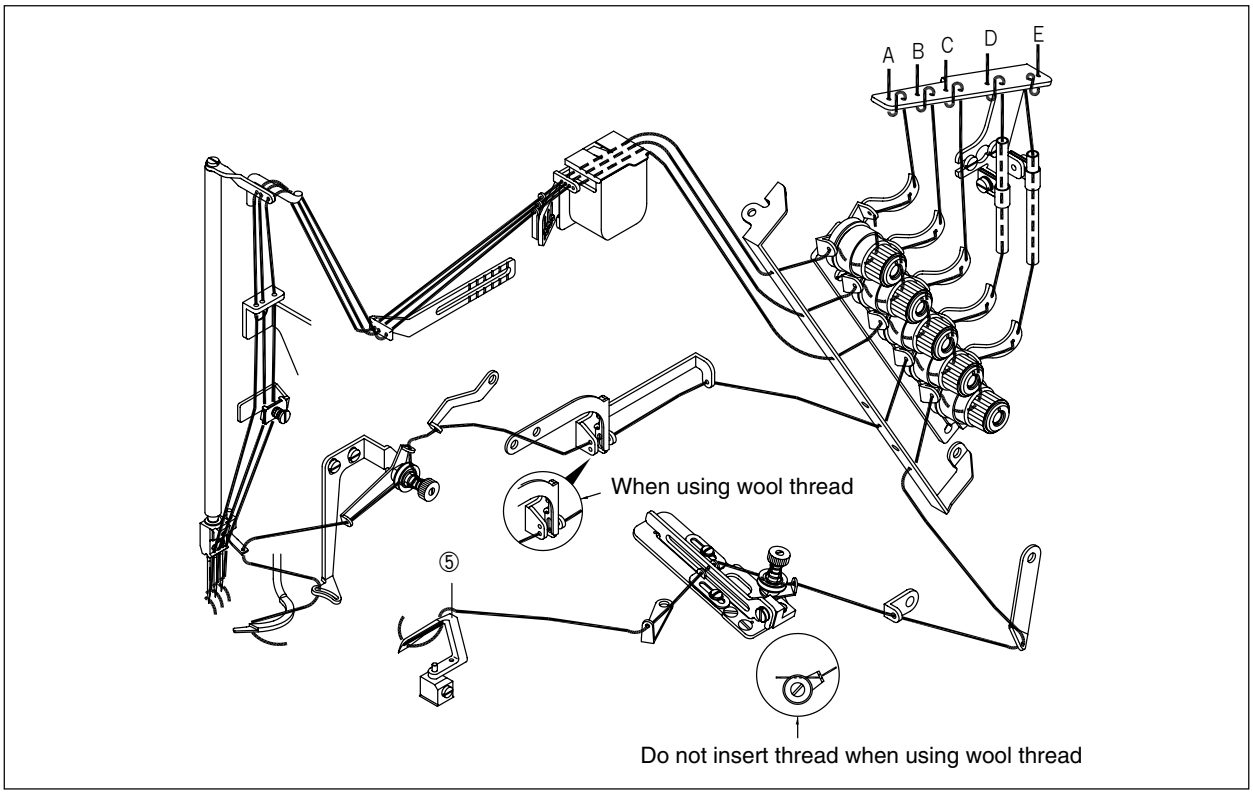

[Figure 18]

4) Adjustment of thread tension

Thread tension must be adjusted according to the type of threads and fabrics, stitch length and other sewing conditions.

Thread tension can be adjusted by rotating the thread adjusting device cap①. Turn clockwise to strengthen and counterclockwise to weaken the tension.

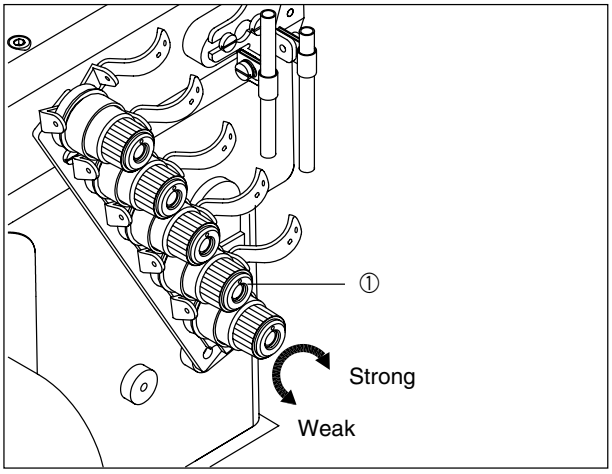

[Figure 19]

5) Adjustment of presser foot tension

If the sewing material is in good condition, it is better to have as little tension as possible on the presser foot.
Loosen the presser bar nut① and turn the presser bar screw ② with a coin to adjust the tension of the presser bar. Re-tighten it afterwards.
Tension will become stronger if the screw② is turned clockwise, and weaker if turned counterclockwise.

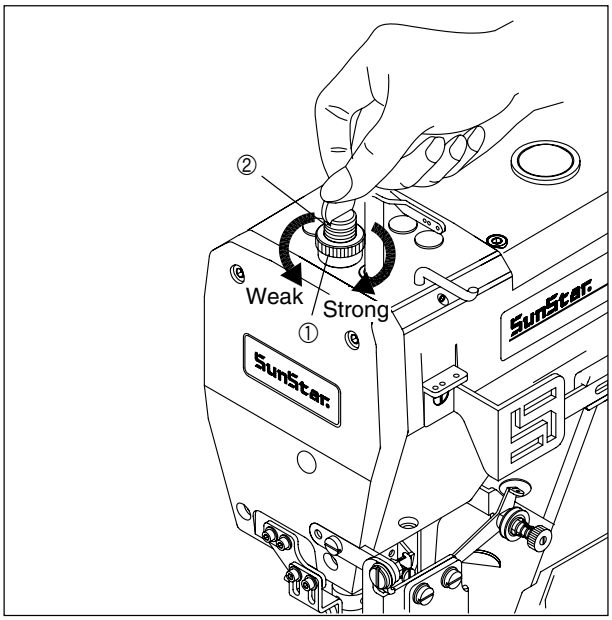

[Figure 20]

6) Adjustment of presser foot

[Warning]
Be sure to turn the power switch off before adjusting the position of the presser foot.

After unfastening the screw ①, move the front part of the presser foot left and right to bring the needle to pass the center of the needle passage of the presser foot.

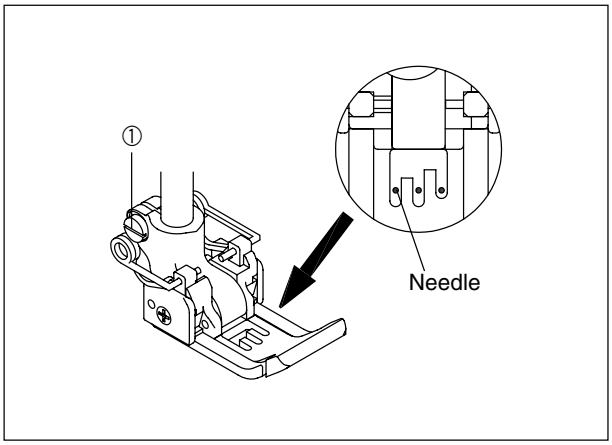

[Figure 21]

7) Adjustment of main feed

[Warning]
Be sure to turn the power switch off before adjusting stitch length.

(1) Stitch length
Stitch length can be adjusted straight from 1.4mm to 3.6 mm
The table below shows stitch length, number of stitches per inch(25.4mm) and per 30 mm.

Stitch length (mm)	No. of stitches (per inch)	No. of stitches (per 30mm)
3.6	7	8
2.4	10.5	12.5
1.4	18	21

(2) Change of stitch length

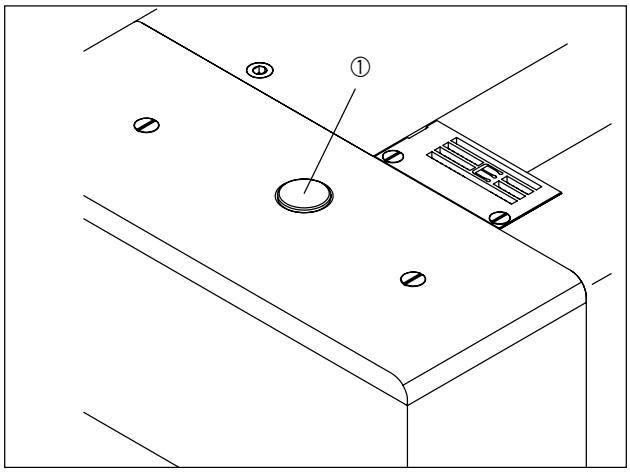

[Figure 22]

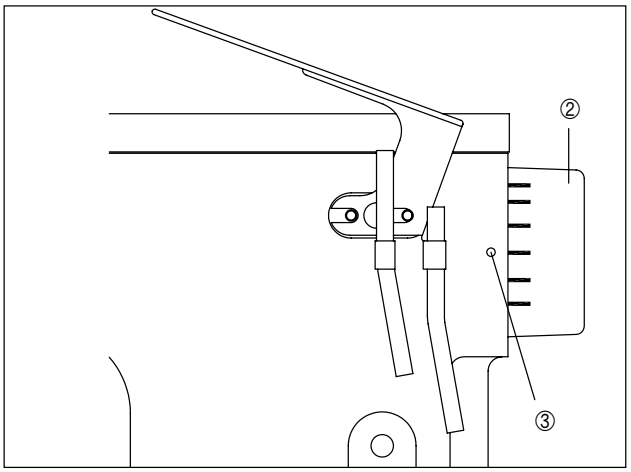

[Figure 23]

Press lightly stitch length-adjusting button① with your left hand so that the end comes in contact with inner parts.
With the button① pushed in, turn the upper shaft pulley② with your right hand so that the button① goes in deeper.
While [the button①] is pressed hard, turn the upper-shaft pulley to change the stitch length. Turn [the upper-shaft pulley ②] clockwise. The closer graduation「L」becomes to [Mark③], the larger the stitch length becomes.
When the mark points at「L」, the stitch length becomes 3.6mm. When [the upper-shaft pulley②] is turned counter-clockwise, and graduation「S」gets closer to [Mark③], the stitch length gets smaller. When the mark points at「S」, the stitch length becomes 1.4mm. Although graduations are same, the corresponding stitch lengths could be different depending on types of fabrics, fabric thickness and size of differential. Therefore, the upper-shaft pulley needs to be readjusted depending on situations.

[Caution]
When using sewing machines mounted with pneumatic trimming devices designed to automatically find the needle location, e.g., UT-A, UT-B or ST-C, be sure to turn off the power before stitch width conversion.

※ Main Feed Adjusting Button Stopper
Use this function to keep the set stitch length same. Loosen [the screw③] to use the stopper. Turn [the main feed adjusting button stopper②] upward to set it up below [the main feed adjusting button①] and fasten [the screw③].

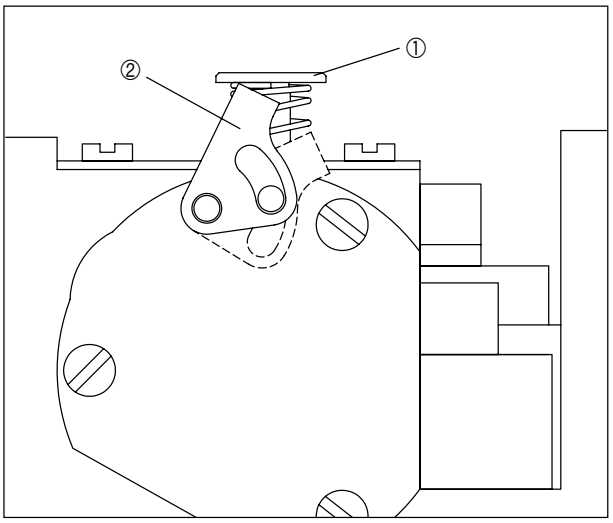

[Figure 24]

8) Adjustment of differential feed

[Warning]
Be sure to turn the power switch off before adjusting differential feed.

(1) Normal Differential Feed (Shrink Sewing)

Loosen [the differential lever adjusting nut①]. Move [the differential feed lever②] up or down to place it at the desired position, and fasten [the nut①].

When the lever is set at [Graduation (Long) (C)], the ratio of main feed to differential feed becomes 1:1. When [the lever②] is set at the position higher than Graduation C, the lever is in the normal differential feed mode. The graduations located above Graduation C refer to 1:1.25, 1:1.15, 1:1.75 and 1:2 from the bottom.

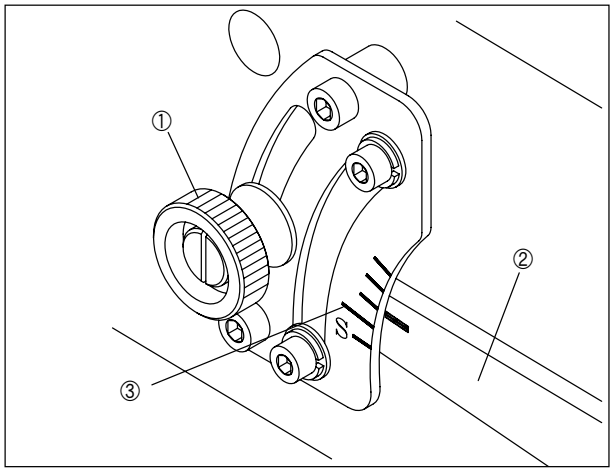

[Figure 25]

(2) Reverse Differential Feed (Stretch Sewing)

When [the differential feed lever②] is set at the place below [Graduation (Long)③], it is in the reverse differential feed mode. When the lever is set at [Graduation S], the ratio of main feed to differential feed becomes 1:0.7.

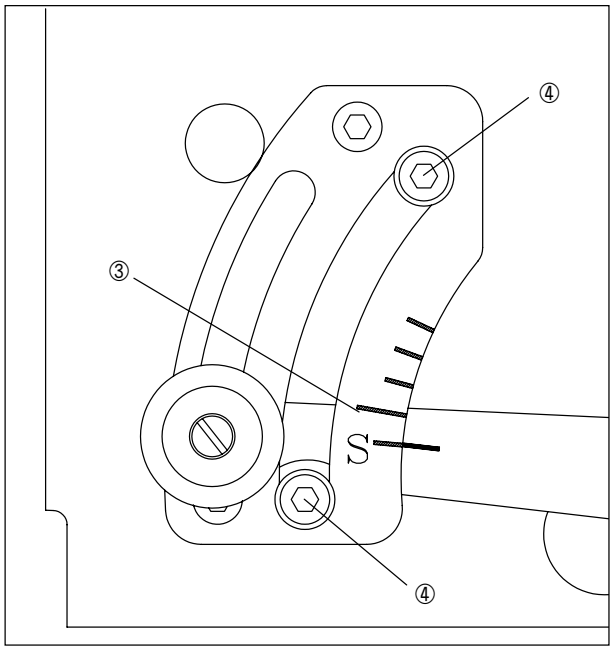

[Figure 26]

(3) Adjustment of Differential Feed During Operation

When differential ratio needs to be adjusted during sewing, connect the lever to the chain.

To adjust the maximum or minimum limits of the differential feed lever, use [the differential feed lever stoppers (2EA)④].

※ Depending on the stitch length, the scope of differential ratios is different. Please see the table below

Stitch Length (mm)	Max. Normal Differential Ratio	Max. Reverse Differential Ratio
3.6	1 : 1.1	1 : 0.7
2.5	1 : 1.6	1 : 0.7
2.0	1 : 1.8	1 : 0.7
1.4	1 : 2	1 : 0.7

9) Needle Cooling Device and Oil Supply Device for Needle Thread

[Warning]
Be sure to turn the power switch off before work.

High-speed sewing generates heat as a result of frictions between the needle and sewing materials. Heat may result in thread breaks, skipped stitches, or enlarged stitch holes when used with polyester threads or fabrics.
To prevent such troubles, this sewing machine comes attached with the needle cooling device and needle thread lubricating device as a standard option.
The silicon-type oil is the most efficient.

Note :
Open [the silicon oil supply tank cap①] of the needle cooling device and [the needle thread oil supply tank cover ②] of [the needle thread oil supply device] to check the oil volume. When oil is insufficient, supply more oil.

※ If there is no need for silicon due to specific sewing conditions, remove the felt to prevent the needle and the thread from passing the dry felt.

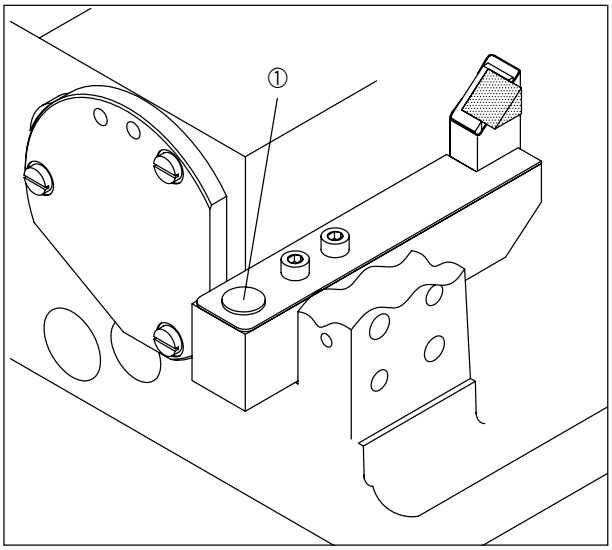

[Figure 27]

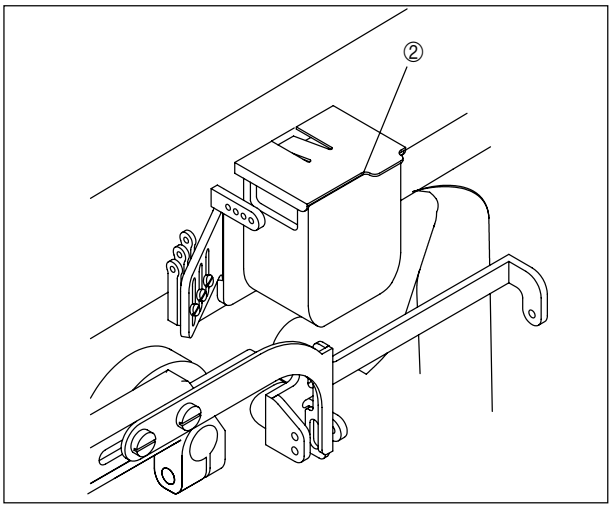

[Figure 28]

8

Adjustment of Sewing Machine

1) Adjustment of Needle Thread Tension

When the tip of [the needle thread take-up①] is 52mm away from the center of [the screw②], and the needle bar is at the highest position, [Part a] of [the needle thread take-up ①] becomes horizontal.
This is a standard needle thread tension.
If you desire to raise the needle thread tension, move [the needle thread take-up①] in the Y direction. If you desire to lower the needle thread tension, move the take-up in the X direction.
To make this adjustment, loosen [the screw②].

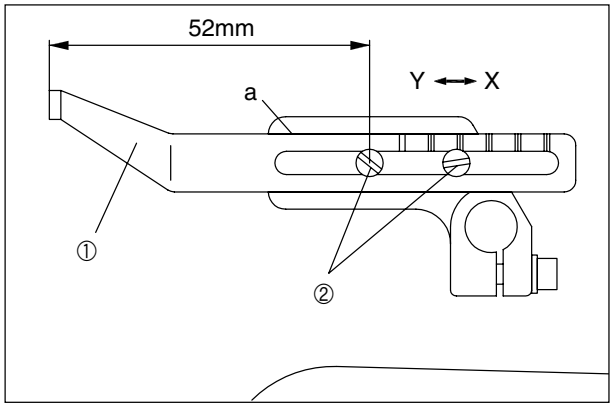

[Figure 29]

If more adjustment is needed, loosen [the screw③] and check the thread tension, while moving the position of [the thread eyelet④]
When the thread eyelet is moved in the Y direction, the tread tension will increase. When it is moved in the X direction, the thread tension will decrease.
The standard setting is to set the distance between the middle of [the screw③] and the upper tip of [the thread eyelet④] at 8mm.

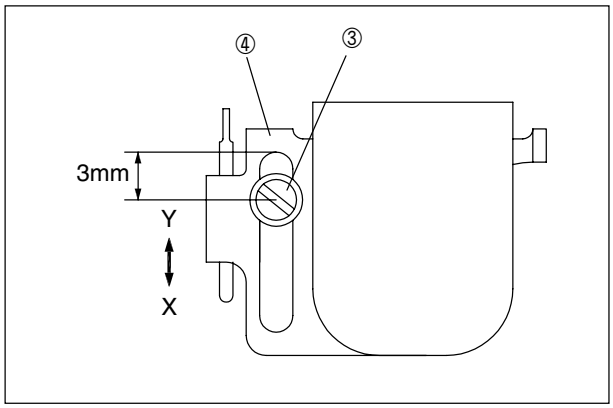

[Figure 30]

For some types of threads, looping is not an easy thing to do. Wrong loops may make it difficult for the looper to pass needle thread loop and cause skipped stitches.

In such case, pull the needle thread through the auxiliary tension-adjusting device of the needle thread ① as shown in figure 31.

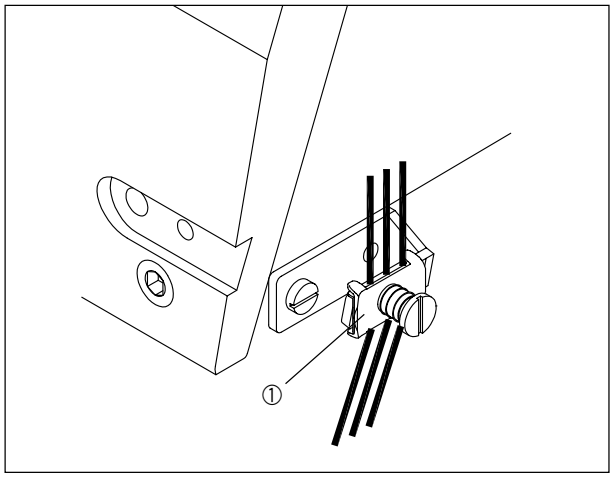

[Figure 31]

Use the needle thread guide ③ when using stretchable threads such as synthetic thread and the loop of needle thread is unstable.
It is a standard setting to bring the center of the needle hole of the needle bar take up ② against the upper side of the needle thread guide when the needle bar is at its lowest position.
The height of the needle bar guide can be adjusted by loosening the screw ④.
(refer to figure 32)

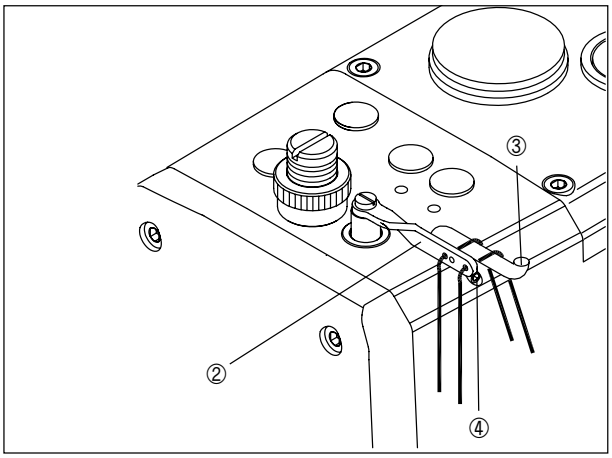

[Figure 32]

2) Adjustment of Top Cover Thread Tension

When [the top cover thread eyelet(Right)①] is moved up in the X direction, the take-up volume decreases. When it is moved down in the opposite way, the take-up volume increases.
When an elastic thread such as woolly thread is used as the top cover thread, loosen [the screw②] to move down [the top cover thread eyelet (Right)①] in the Y direction. This time make sure that the top cover thread passes through the bottom hole as in the right figure.

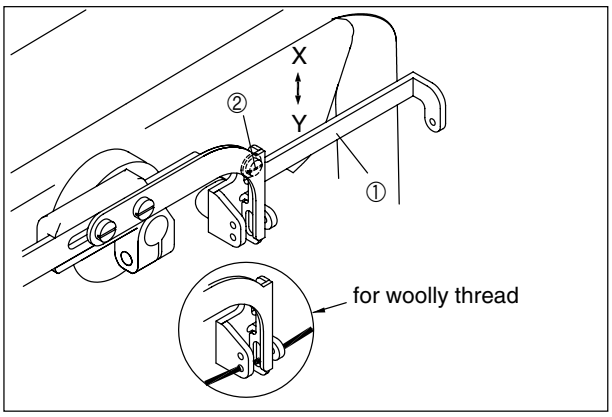

[Figure 33]

3) Adjustment of the Looper Thread Tension

The figure shows the looper thread take-up.
The standard setting is to place the thread holes of [the looper thread guide⑥,⑦] at [Mark X] on [the looper thread cast-off plate⑤].
To increase the length of loose thread, loosen the fixing screws for [the looper thread guides⑥,⑦], and move them forward and then fix them. To reduce the length of loose thread, move the looper thread guides backward and fix them.

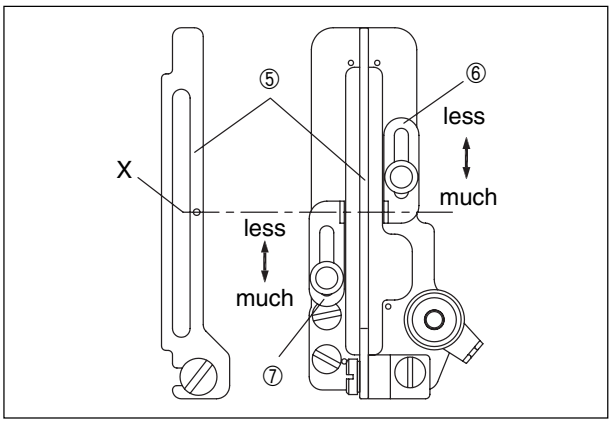

[Figure 34]

Note :
If the looper thread' s loose thread is too long, it might cause stitch skips. Make sure that the looper thread' s loose thread is not too long.
When using woolly thread, move [the looper thread guides ⑥,⑦] forward to the maximum and make sure that the thread doesn' t pass through [the supplementary tension disc (H)].

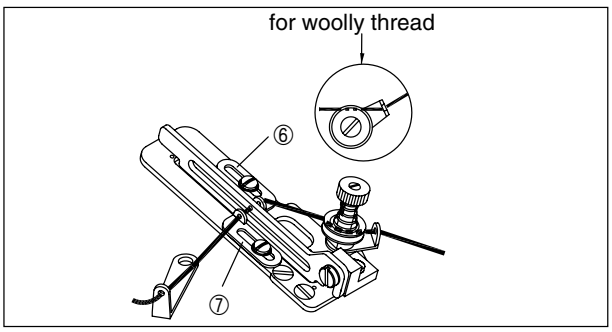

[Figure 35]

4) Position of Looper Cam

In the figure, the looper cam is viewed from the side of the needle bar.

When the left needle reaches the middle of the looper, lower the needle from the highest position so that the thread stays away from the highest position of [the looper cam①].

See the figure below.

Make adjustments by loosening [the screw②].

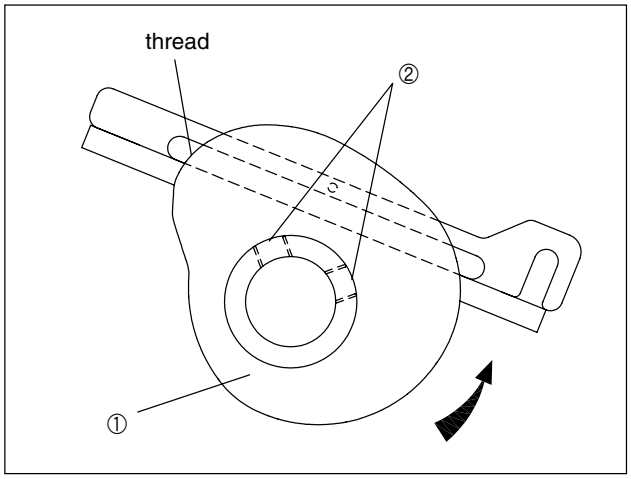

[Figure 36]

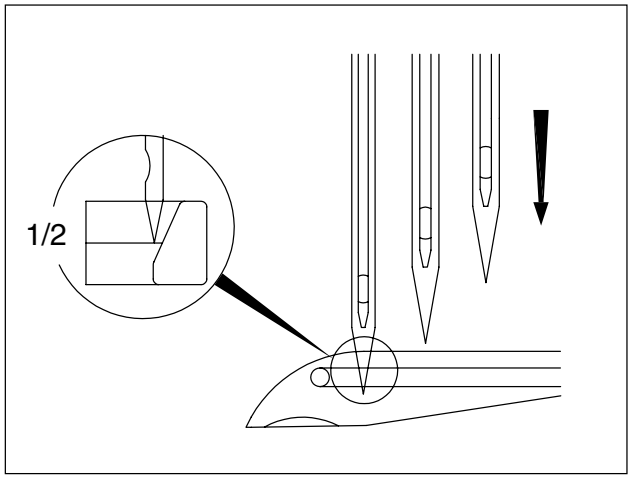

[Figure 37]

5) Removing Presser Foot and Amount of Presser Foot Lift

Loosen [the screw④] for [the presser plate collar③]. Press [the lap lift lever①] and separate the presser foot. When [the lap lift lever①] is pressed, adjust the maximum height of the presser foot to set the distance between the front face of the needle plate and the bottom of the presser foot at 7.0mm (when the spreader is equipped).

When this adjustment is completed, set the distance between the bottom of [the presser bar bushing⑥] and the front face of [the presser bar collar③] at 0.2mm and fasten [the screw④].

If there is no [the spreader⑦], set the distance at 8.0mm. In this case, [the presser bar collar③] is not used.

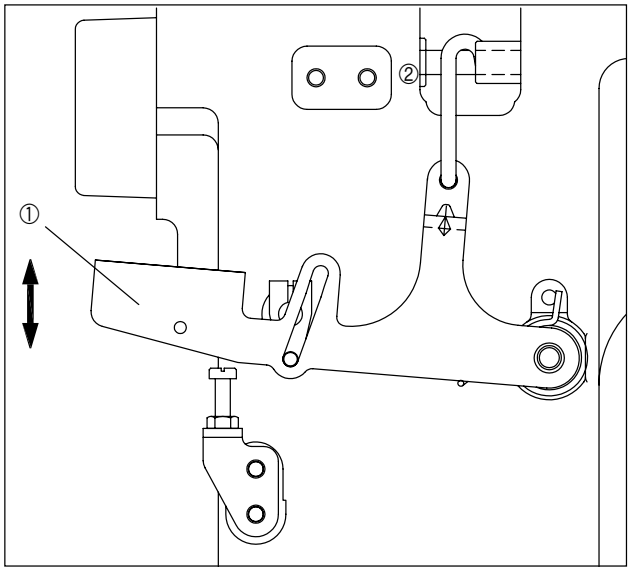

[Figure 38]

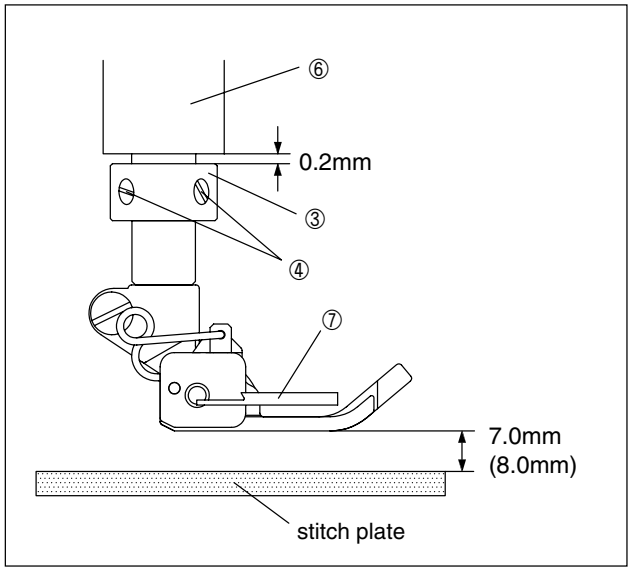

[Figure 39]

6) Relation between Needle and Needle Plate

When the adjustment of the needle bar height is completed, needles should be accurately positioned in line following the solid line as in the right figure. Make sure that the needles are not placed following the dotted line.

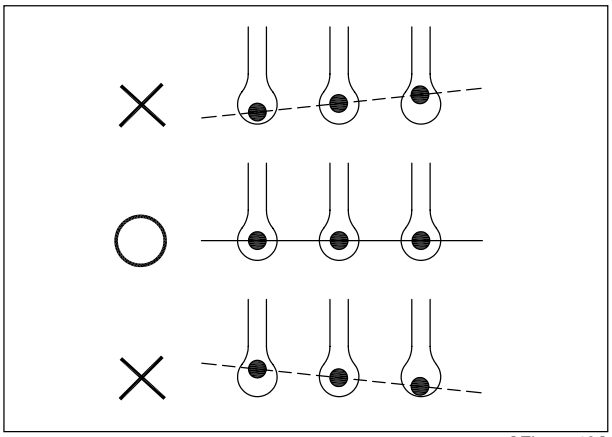

[Figure 40]

7) Fixing Angle and Height of Looper

Insert the looper into the end of [the looper holder①] and fasten [the looper fixing screw②]. Then the height and the fixing angle (3°) are determined (See [Fig. 41])

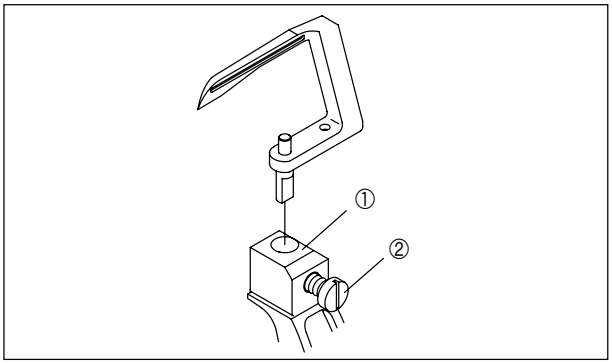

[Figure 41]

8) Movement of Looper to the Right

When the needle bar is located at the lowest position, the looper is on the furthest right side.

[The right-side position of the looper (distance between the tip of the looper and the middle part of the needle) (D)] depends on the needle distance.

Adjust [the right feed volume of the looper] based on the table below.

Adjustment can be made by loosening [the fixing screw①] for the looper holder.

※ Without exception, the distance between the center of the needle bar and the tip of the looper is 6mm regardless of needle distance.

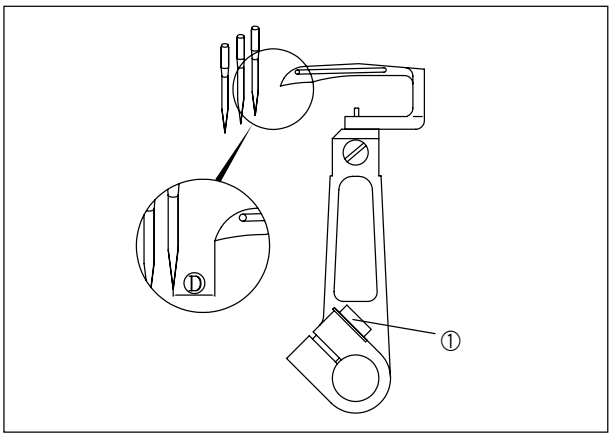

[Figure 42]

Gauge between Needles	Gauge mark	Right Feed Volume of Looper
3.2mm	A	4.4 mm
4.0mm	B	4.0 mm
4.8mm	C	3.6 mm
5.6mm	D	3.2 mm
6.4mm	E	2.8 mm

☆ To make the adjustment of the looper' s right-side feed volume easy, use [the looper timing gauge]. The timing gauge should be purchased as an extra item. When it is needed, contact the shop where you purchased the product or SunStar directly.

9) How to Use Timing Gauge

The timing gauge is marked with A, B, C, D, and E depending on needle distance. When the looper is located on the furthest right side and the right needle is nested at corresponding needle distance "V groove", align the looper with the timing gauge and fasten "the looper holder screw."

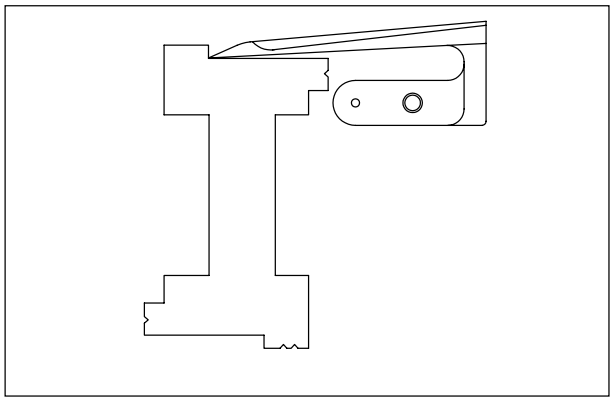

[Figure 43]

10) Height of Needle Bar

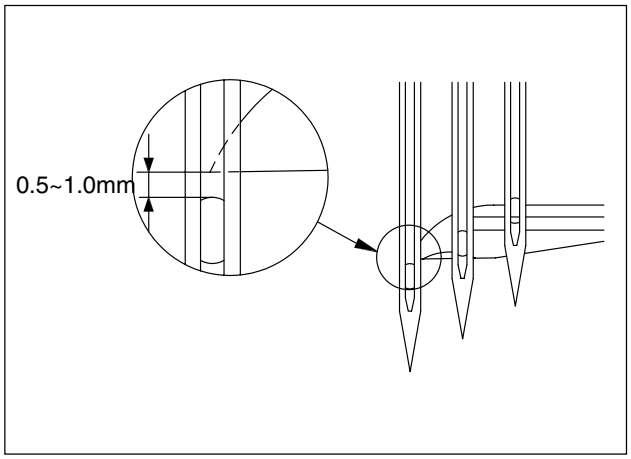

[Figure 44]

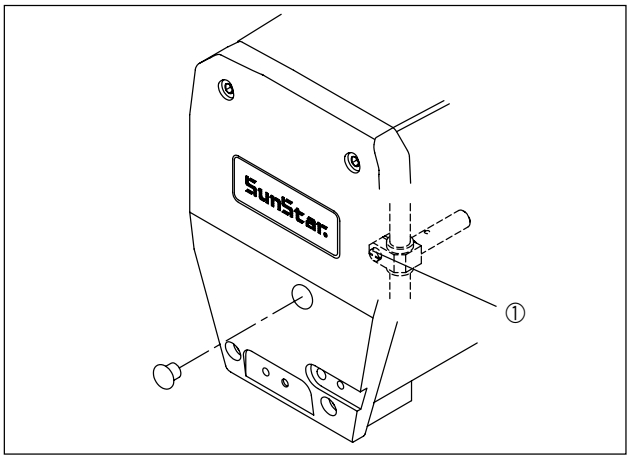

[Figure 45]

When the end tip of the looper passes the left needle center, it must pass the needle groove at 0.5~1.0 mm off from the upper part. In other words, the height of the needle is set by the looper.

Using a driver, unfasten the screw① of the needle bar holder through a hole in the face plate and adjust the needle bar up and down to get the right needle height.

11) Longitudinal Position of Needle and Looper

☆ **In case where three needles are used**

When [the tip of the looper(A)] meets [the left needle ①], the needle distance should be 0.2~0.3mm.

When [the tip of the looper(A)] meets [the central needle ②], the needle distance should be 0.05~0.15mm.

When [the tip of the looper(A)] meets [the right needle ③], needles should be slightly contacted (some 0.2mm).

In this case, press [the needle guide(Rear)] for [the right needle③], and adjust the distance between [the tip of the looper(A)] and [the right needle③] at 0~0.05mm.

Make the adjustment by loosening the screw for [the looper holder].

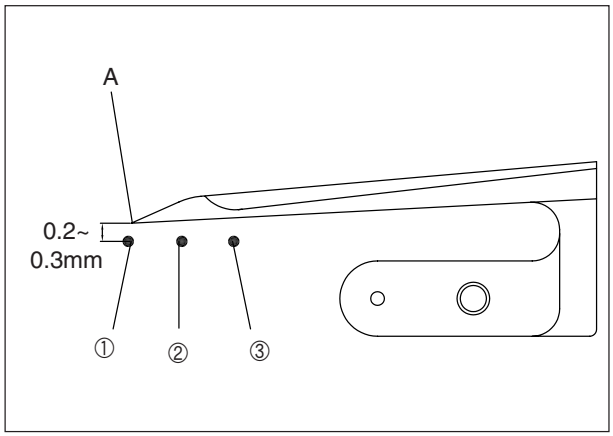

[Figure 46]

☆ **In case where two needles are used**

When [the tip of the looper(A)] meets [the left needle ④], the needle distance should be 0.2~0.3mm.

When [the tip of the looper(A)] meets [the right needle⑤], the needles should be slightly contacted (some 0.2mm).

In this case, press [the needle guide(Rear)] for [the right needle⑤], and adjust the distance between [the tip of the looper(A)] and [the right needle⑤] at 0~0.05mm.

Make the adjustment by loosening the screw for the looper holder.

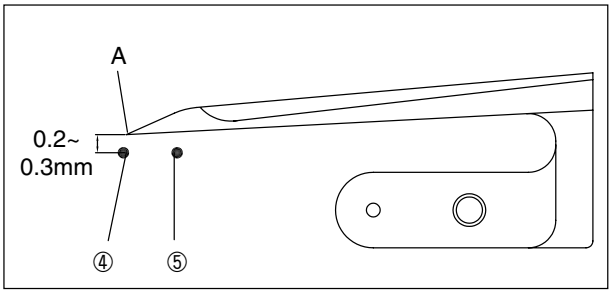

[Figure 47]

12) Needle and Needle Guard(Rear)

☆ **Height of Needle Guard(Rear)**

When needle guard (R) is at the lowest point of the needle bar, align the center of the needles along the line a of the needle guard (R) .

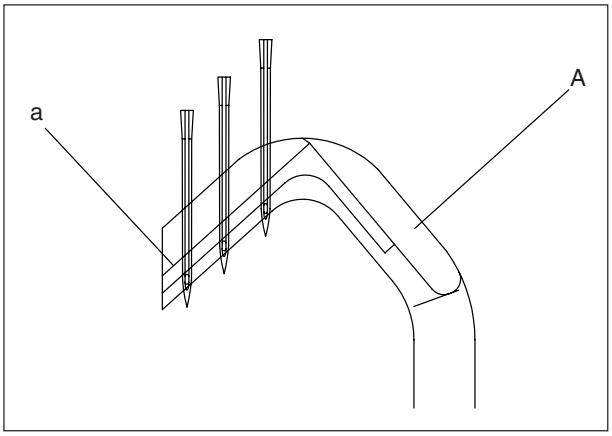

[Figure 48]

☆ **Longitudinal position of needle guard(R)**

When the end tip of the looper comes to the center of the right needle, press the needle guard (R) to adjust the clearance between the needle and the looper at 0~0.05 mm. At this point, be sure to set the distance between the left needle and the needle guard (R) at 0~0.05 mm. Adjustments can be done by loosening the screws (①, ②).

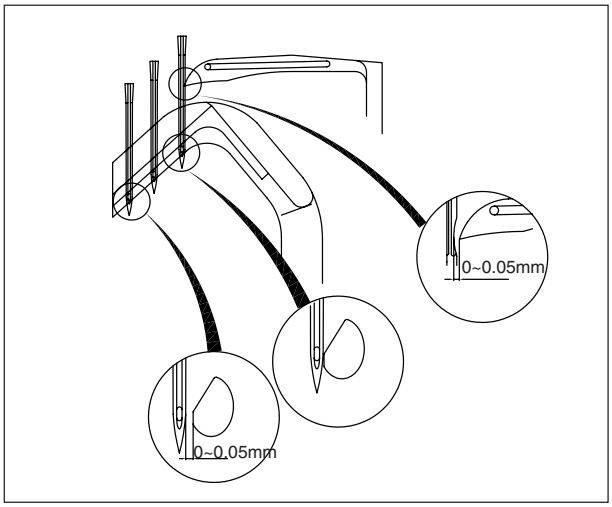

[Figure 49]

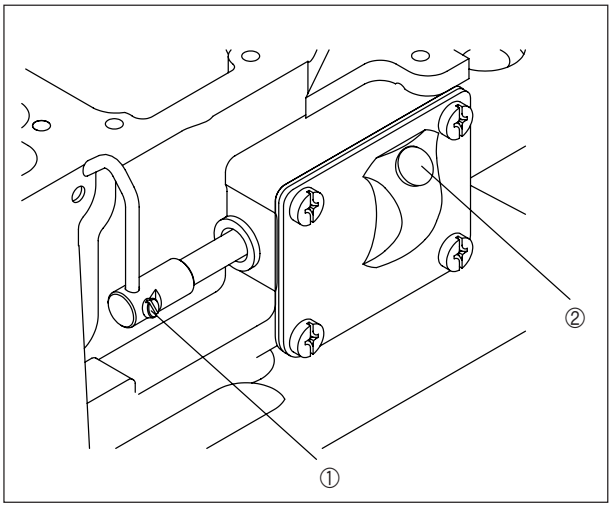

[Figure 50]

13) Needle and Needle Guard(Front)

When the tip of the looper is located at the center of the left and right needles, adjust the distance between each needle and [the needle guard(Front)ⓝ] at 0~0.3mm respectively. Make the adjustment by loosening [the screw①].

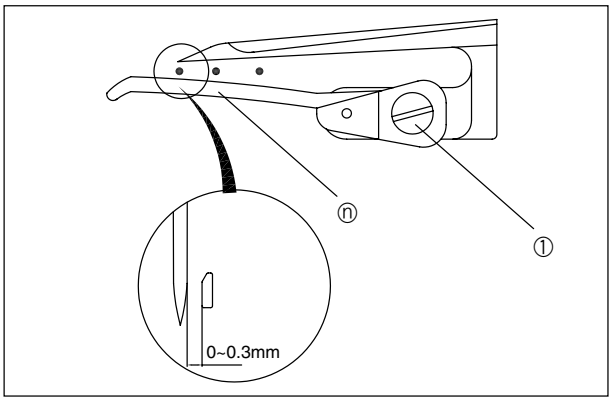

[Figure 51]

14) Height of Feed Dogs

When the feed dog is located at the highest position, the front face of the feed dog and the front face of the needle plate are in parallel. In this case, make [the differential feed dog(A)] and [the main feed dog(B)] have the same height, and set the height between the front face of the needle plate and the front face of the feed dog at 1.0~1.2mm.

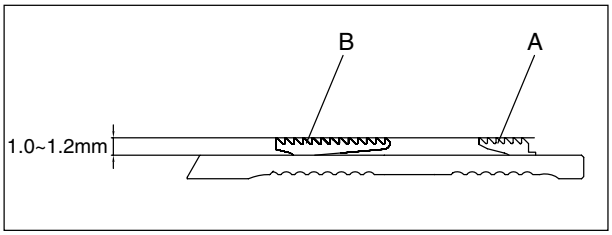

[Figure 52]

15) Adjustment of needle and spreader

(1) Fixing of spreader

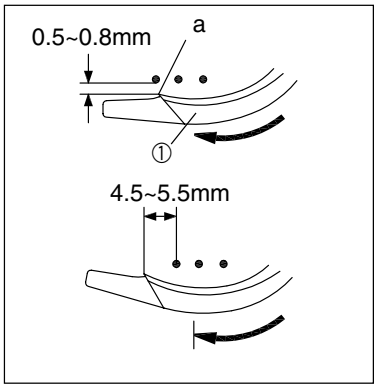

[Figure 53]

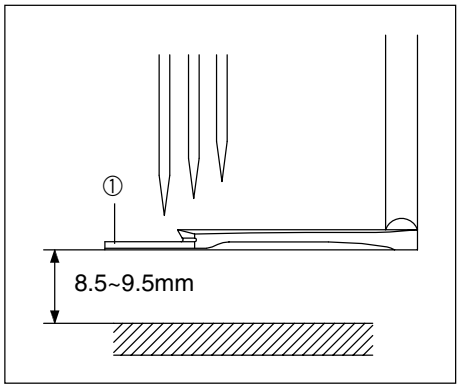

[Figure 54]

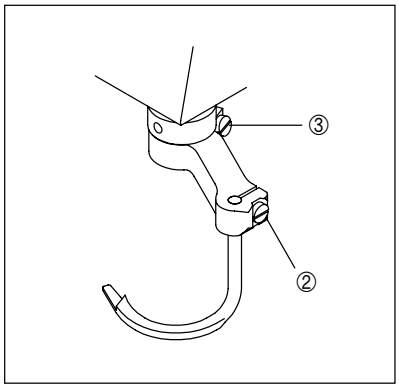

[Figure 55]

When the spreader① moves to the left, the clearance between the left needle and the hook tip of the spreader (a) is 0.5mm ~ 0.8mm. (Figure 53)

When the spreader sits at the far left, the distance from the left needle center to the hook tip of the spreader (a) is 4.5mm ~ 5.5mm.

The spreader can be adjusted by untightening the spreader fixing screw② and the spreader handle fixing screw③. (Figure 55)

(2) Fixing of top cover thread guide

The clearance between the lower side of the top cover thread guide④ to the upper side of the spreader① is 0.5mm.

Fix the screw⑤ when the spreader is at its far right, in order to hook the thread well onto the thread hooking part.

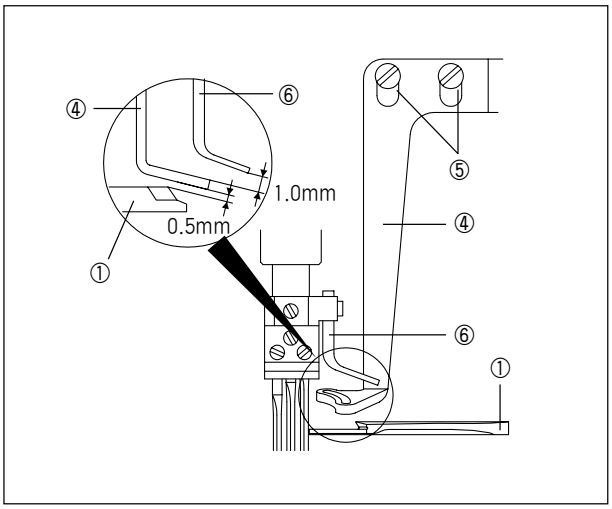

[Figure 56]

(3) Fixing of the top cover thread eyelet

When the needle bar is located at the lowest position, adjust the front face of the top cover thread guide④ and the thread hole of the top cover thread eyelet⑥ to be at the central line of the top cover thread guide④ slot and fasten the screw⑦.

※ Adjust (1), (2) and (3), depending on the type of thread used.

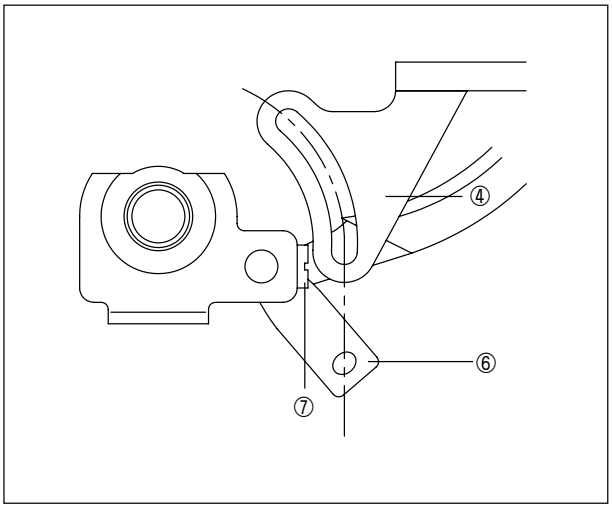

[Figure 57]

9

Automatic Thread Trimmer

1) Operation

[Caution]
Be sure to lay sewing materials under the presser foot before operation.

(1) Operation procedures for UT-B and UT-A device.

Motor is selected either from ① or ②. Operation procedures for ① or ② are as follows.

A. Put sewing materials under the presser foot and step on the pedal towards ① position.

B. Leave pedal at ② neutral
→ The needle will stop at the highest point.

C. Step the pedal backward towards ③ position.
→ The trimming device will begin to move under the needle plate to cut the needle thread and looper thread. The looper thread will be caught by clamp spring, and air wiper will run for two seconds, and then presser foot will go up.
→ (For UT-A device, lifting of the presser foot and wiper operation will begin at the same time.)

D. Leave the pedal at ② neutral
→ The presser foot will go down.

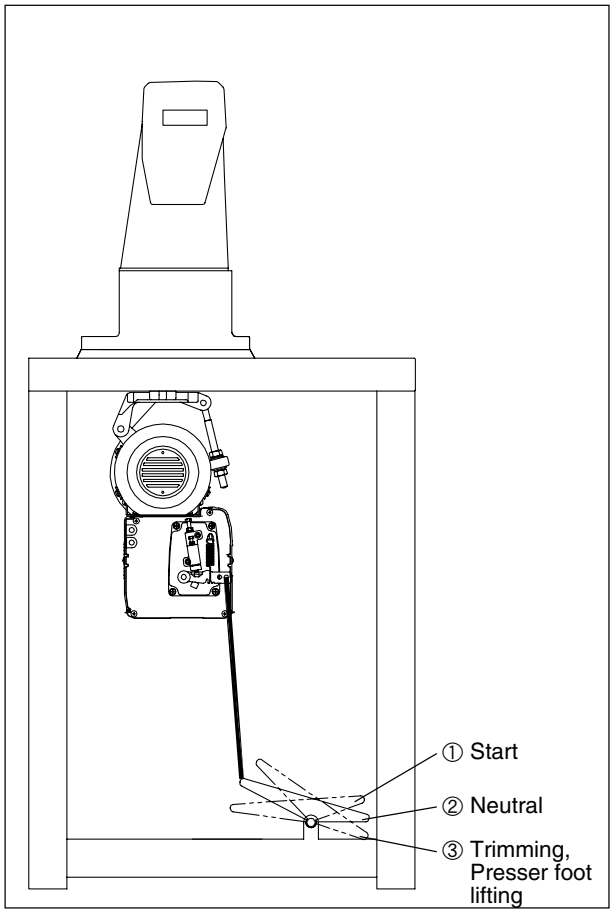

[Figure 58]

[Caution]
If the pedal is not in ① position, move the pedal towards ② or ③ to bring the presser foot up/down.

[Caution]
Be sure to place sewing materials under the presser foot before operation.

(2) Operation procedures for ST-C device.

Motor is selected either from ① or ②. Operation procedures for ① or ② are as follows.

A. Put sewing materials under the presser foot and step on the pedal towards ① position
   → Sewing will begin.
B. Leave pedal at ② neutral
   → The needle will stop at the highest point.
C. Step the pedal backward towards ③ position.
   → The trimming device will begin to move under the needle plate to cut the needle thread and looper thread. The clamp spring will catch the looper thread, after trimming top cover thread, and the presser foot will go up.
   → (For UT-A device, lifting of the presser foot and wiper operation will begin at the same time.)
D. Leave the pedal at ② neutral.
   → The presser foot will go down.

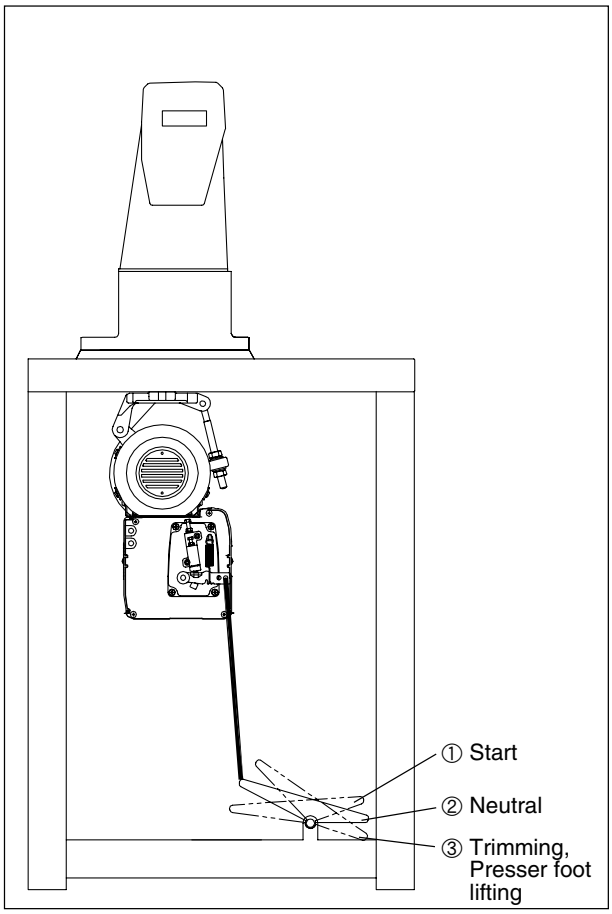

[Figure 59]

[Caution]
If the pedal is not in ① position, move the pedal towards ② or ③ to bring the presser foot up/down.

2) Wiring

(1) Limit switch

A. Adjusting limit switch

a. Loosen screws ① and ②.

b. When trimming blade returns to its original position, adjust so that the switch is turned on.

c. Fix screws ① and ②.

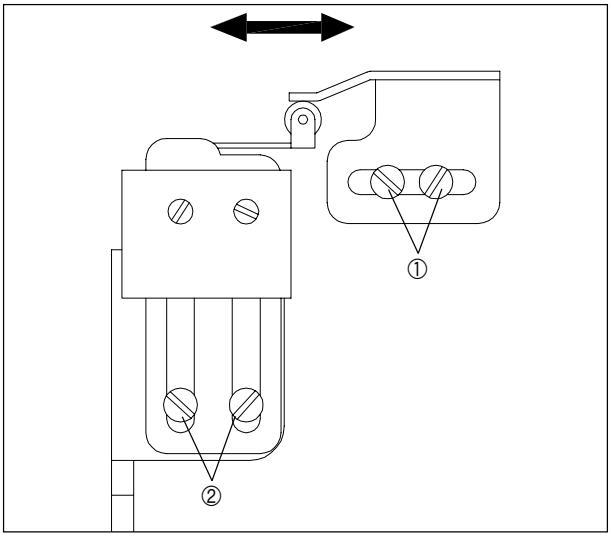

[Figure 60]

B. Connecting limit switch

a. General Servo motor A (Fortuna Ⅲ)

Link the limit switch cord to the 12P-connector as follows.

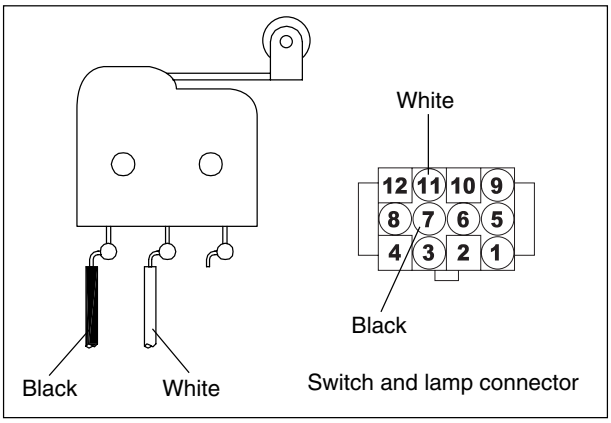

[Figure 61]

b. Small motor A (Fortuna Ⅳ)

Link the limit switch cord to 8P-connector as follows.

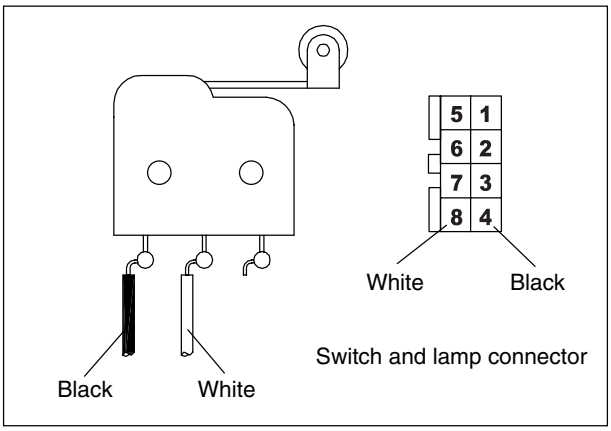

[Figure 62]

(2) Connecting solenoid valve

A. General Servo Motor(Fortuna Ⅲ servo motor)

a. For UT-B device

- Press solenoid valve buttons to check how each device moves.
- If the device does not work, check the cords.
- For the pneumatic solenoid valve carries polarity, check the connection between the cable and the connector.
  The device will not work if the cords are plugged in incorrectly to opposite power.

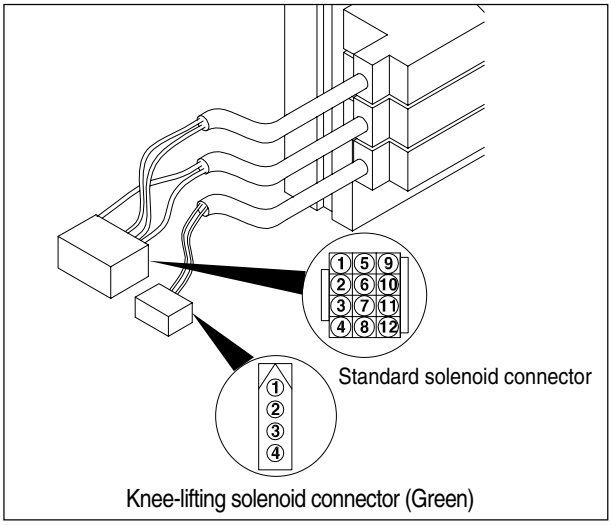

[Figure 63]

Solenoid valve number	Solenoid valve application	Connector type	Pin number
1	Presser foot lifting	Knee-lifting solenoid connector	3 [+], 4 [signal]
2	Lower trimming	Standard solenoid connector	2 [signal], 6 [+]
3	Air wiper operation	Standard solenoid connector	3 [signal], 7 [+]

b. For UT-A device.

- Press solenoid valve buttons to check how each device moves.
- If the device does not work, check the cords.
- For the pneumatic solenoid valve carries polarity, check the connection between the cable and the connector.
  The device will not work if the cords are plugged in incorrectly to opposite power.

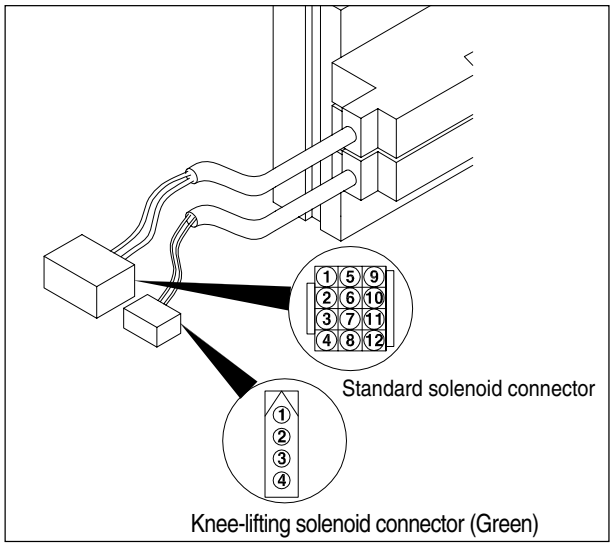

[Figure 64]

Solenoid valve number	Solenoid valve application	Connector type	Pin number
1	Presser foot lifting	Knee-lifting solenoid connector	3 [+], 4 [signal]
2	Lower trimming	Standard solenoid connector	2 [signal], 6 [+]

c. For ST-C device.

- Press solenoid valve buttons to check how each device moves.
- If the device does not work, check the cords.
- For the pneumatic solenoid valve carries polarity, check the connection between the cable and the connector.
  The device will not work if the cords are plugged in incorrectly to opposite power.

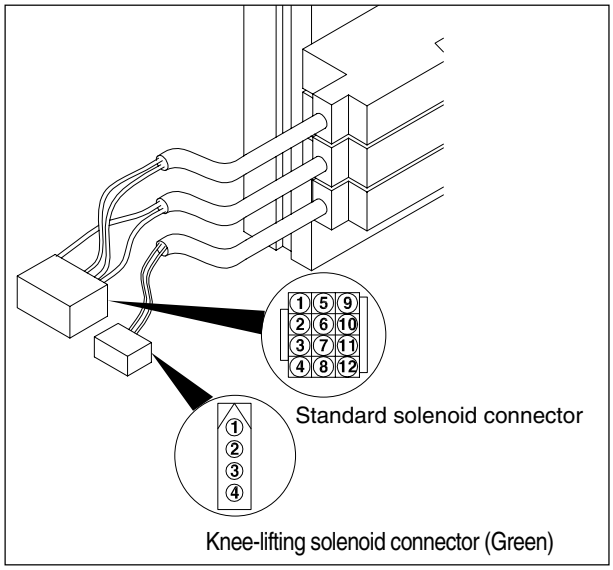

[Figure 65]

Solenoid valve number	Solenoid valve application	Connector type	Pin number
1	Presser foot lifting	Knee-lifting solenoid connector	3 [+], 4 [signal]
2	Lower trimming	Standard solenoid connector	2 [signal], 6 [+]
3	Top cover thread trimming	Standard solenoid connector	3 [signal], 7 [+]

B. Small Motor(Fortuna Ⅳ Compact Servo Motor)

a. For UT-B device.

- Press solenoid valve buttons to check how each device moves.
- If the device does not work, check the cords.
- For the pneumatic solenoid valve carries polarity, check the connection between the cable and the connector.
  The device will not work if the cords are plugged in incorrectly to opposite power.

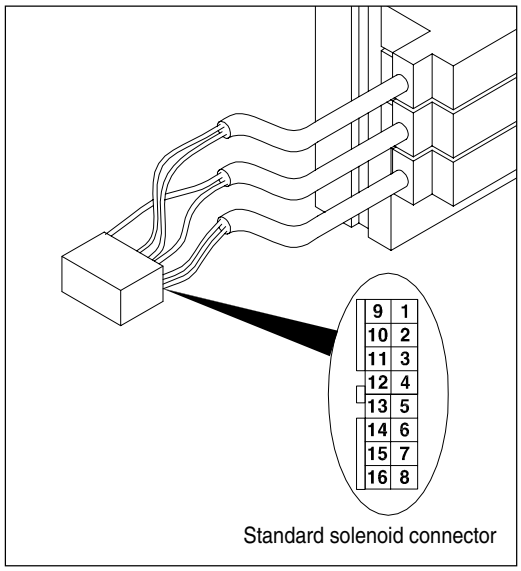

[Figure 66]

Solenoid valve number	Solenoid valve application	Connector type	Pin number
1	Presser foot lifting	Standard solenoid connector	2 [+], 10 [signal]
2	Lower trimming	Standard solenoid connector	11 [signal], 3 [+]
3	Air wiper operation	Standard solenoid connector	12 [signal], 4 [+]

b. For UT-A device.

- Press solenoid valve buttons to check how each device moves.
- If the device does not work, check the cords.
- For the pneumatic solenoid valve carries polarity, check the connection between the cable and the connector.
  The device will not work if the cords are plugged in incorrectly to opposite power.

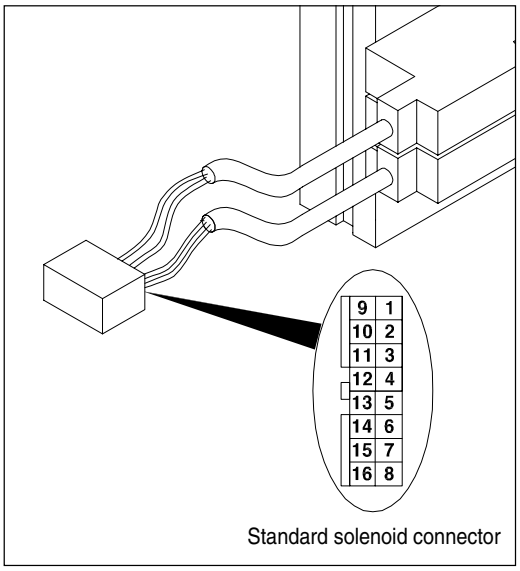

[Figure 67]

Solenoid valve number	Solenoid valve application	Connector type	Pin number
1	Presser foot lifting	Standard solenoid connector	2 [+], 10 [signal]
2	Lower trimming	Standard solenoid connector	11 [signal], 3 [+]

c. For ST-C device.

- Press solenoid valve buttons to check how each device moves.
- If the device does not work, check the cords.
- For the pneumatic solenoid valve carries polarity, check the connection between the cable and the connector.
  The device will not work if the cords are plugged in incorrectly to opposite power.

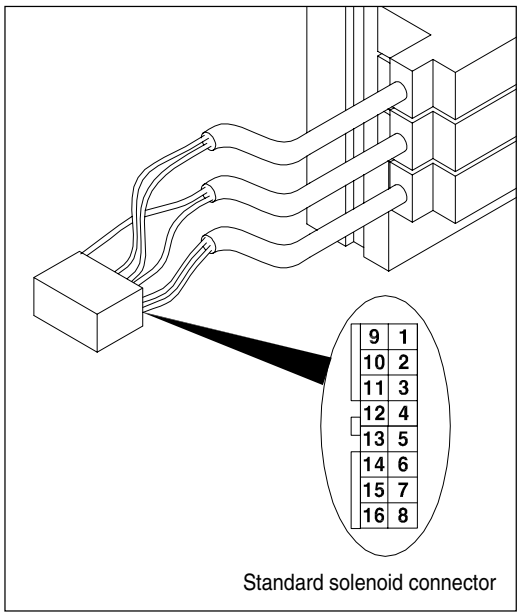

[Figure 68]

Solenoid valve number	Solenoid valve application	Connector type	Pin number
1	Presser foot lifting	Standard solenoid connector	2 [+], 10 [signal]
2	Lower trimming	Standard solenoid connector	11 [signal], 3 [+]
3	Top cover thread trimming	Standard solenoid connector	12 [signal], 4 [+]

3) Air pressure wiring map

(1) UT-B device

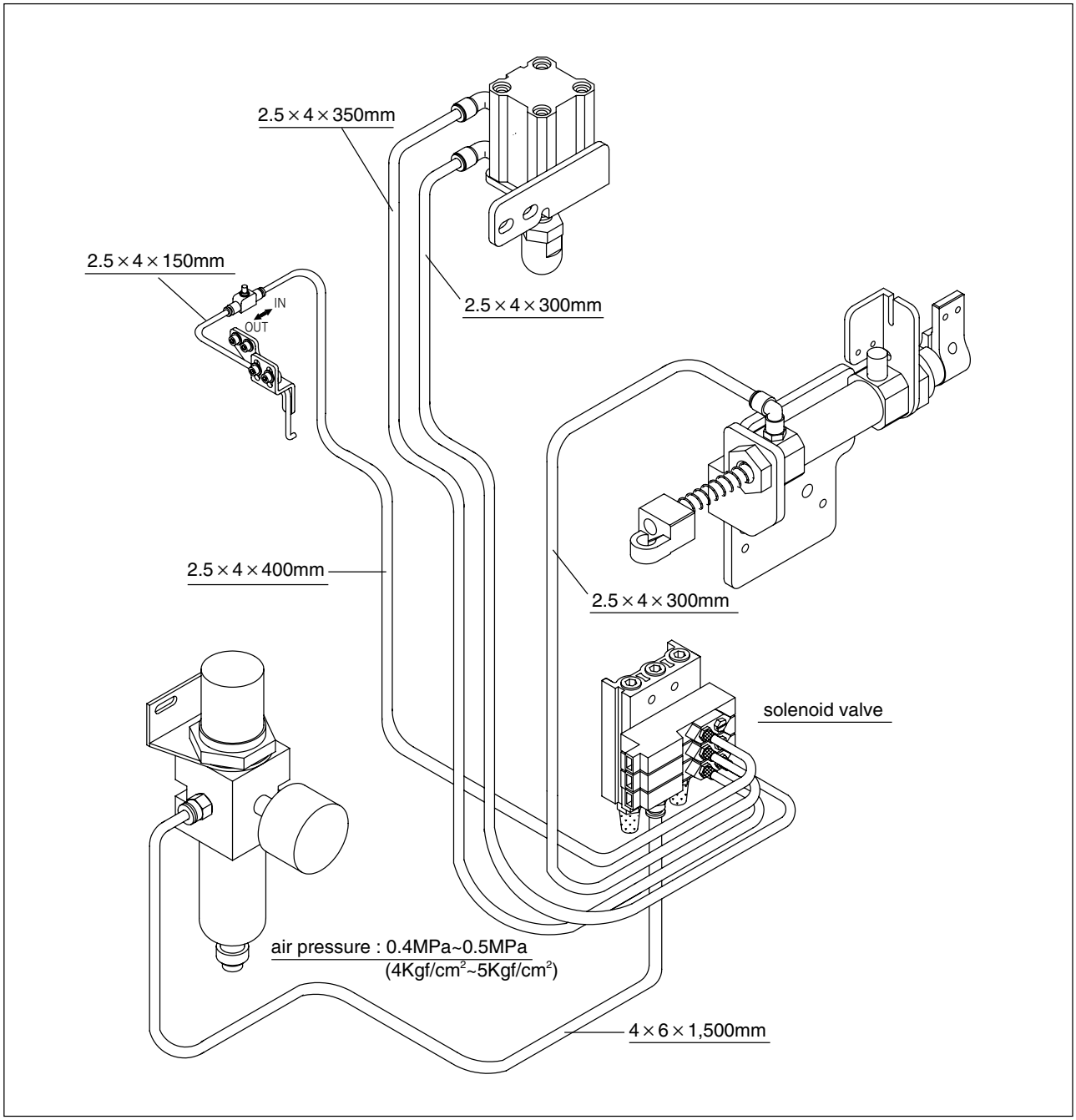

[Figure 69]

(2) UT-A device

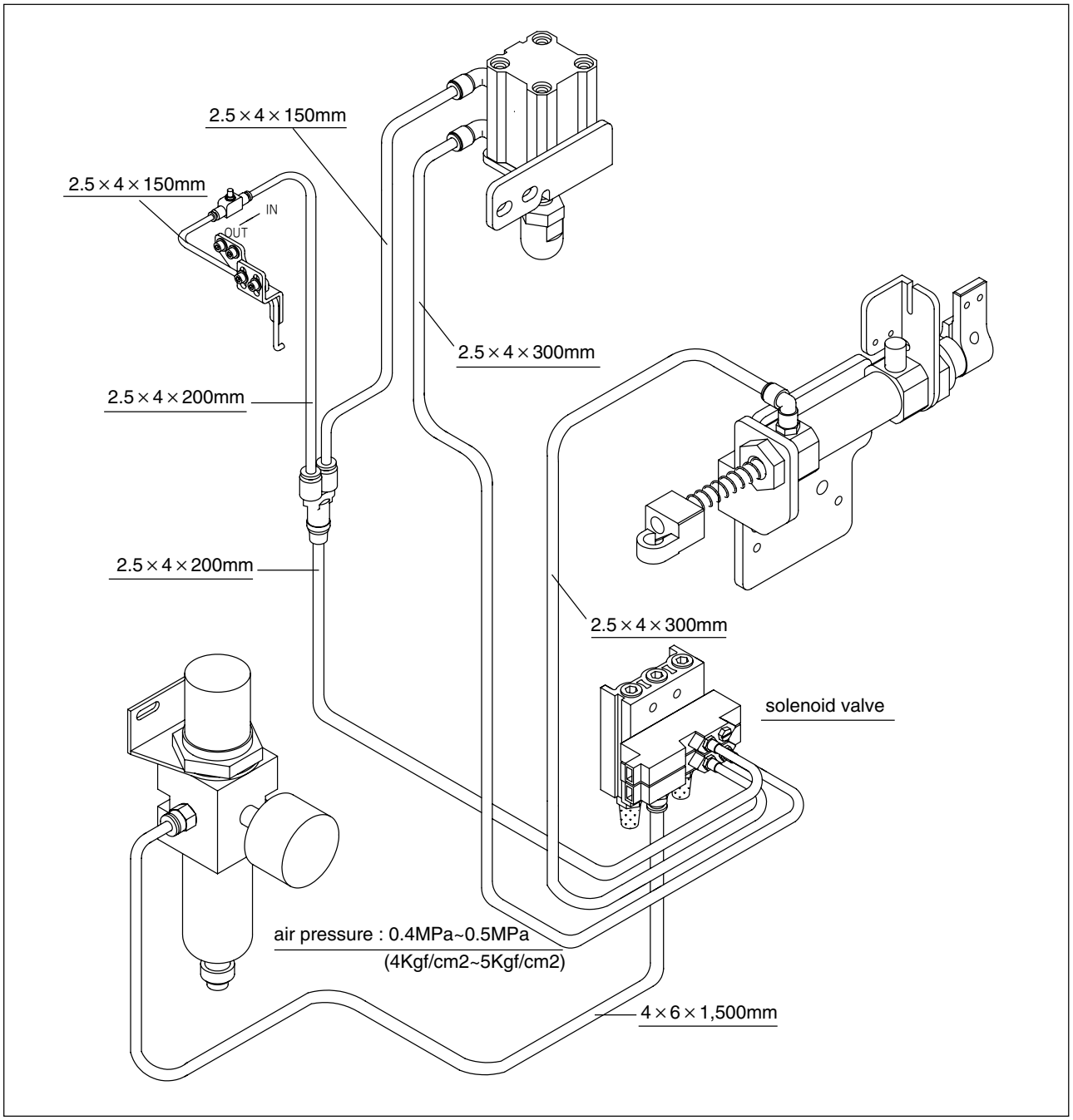

[Figure 70]

(3) ST-C device

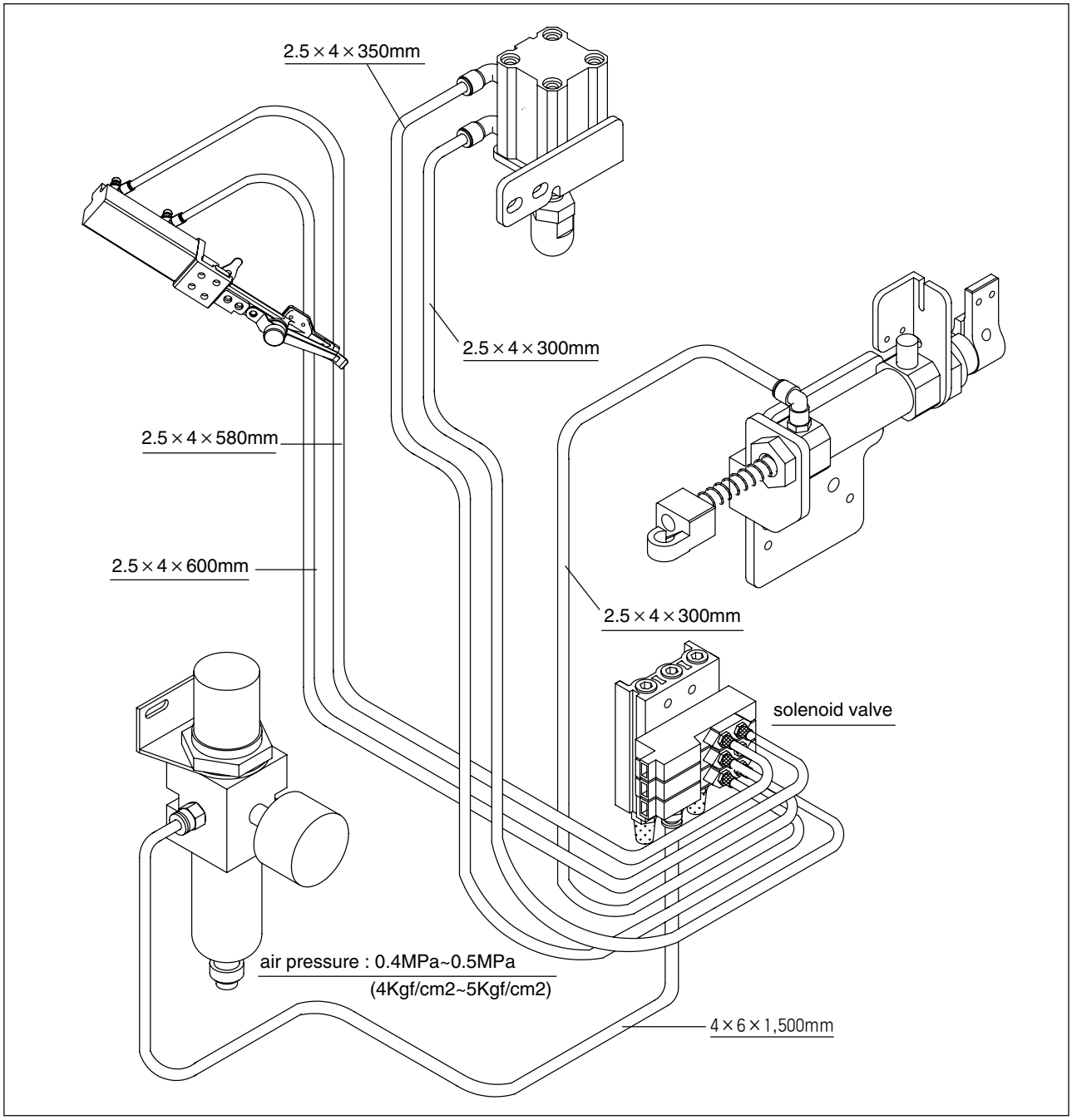

[Figure 69]

4) Installation of synchronizer sensor

[Warning]
Leave the trimming cylinder plug pulled off from the control box in the motor. Otherwise, parts can be damaged.

(1) Install the synchronizer ① on the machine and fasten screw ② lightly.
(2) Turn on the motor switch.
(3) Press the pedal and form a few stitches.
(4) Press the pedal backward to stop the needle.
(5) Loosen the screw ② and turn the line ④ on the upper shaft pulley to align with the hole ⑤ in the arm. Be sure to keep the position of the screw ② unchanged.

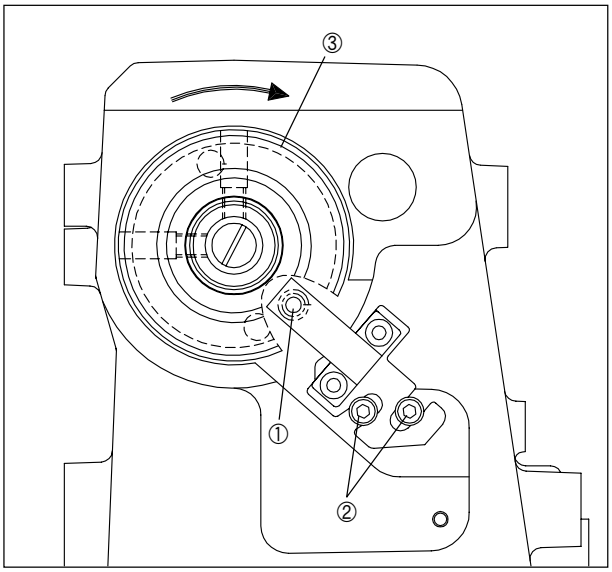

[Figure 72]

(6) To see whether the needle bar is located at 0.5mm below the highest point, press the pedal and run the machine.

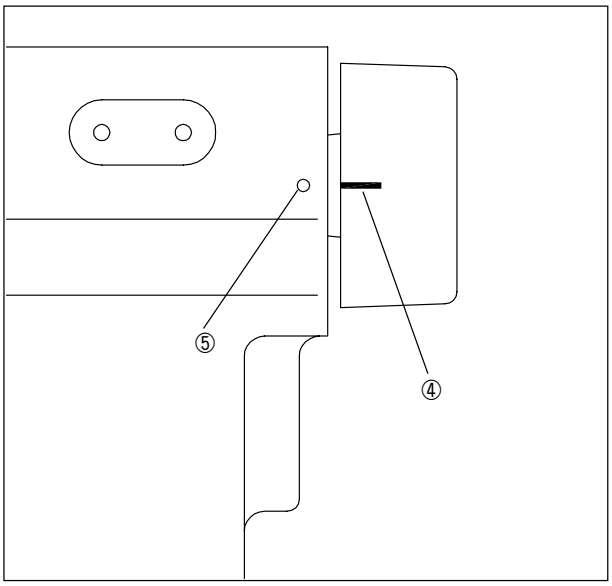

[Figure 73]

[Caution]
(1) At this point, the needle bar should be positioned at the highest point.
(2) The optimal condition for the synchronizer sensor is when the needle bar is 0.5mm below the highest point by turning the upper shaft pulley a bit more.

5) Adjustment of automatic thread trimmer

[Warning]
Before adjustments, always turn off the motor switch and check to make sure that the motor is in stop mode.

(1) Adjusting thread trimming air cylinder

A. The desirable stroke is 15mm.

B. Loosen the screw ② of the collar ① to adjust the stroke.

[Caution]
The operation status of the automatic thread trimmer should be re-adjusted when air cylinder stroke changes. Check the status of the limit switch.

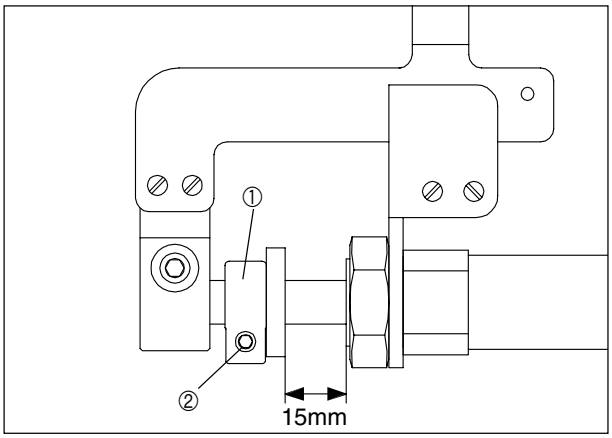

[Figure 74]

(2) Position of moving mes

[Warning]
The trimming device can be moved manually only when the needle is at the highest point. Otherwise, parts can be damaged.

When the looper is located on the furthest left side, move the moving mes③ to the left.

Adjust the tip of the moving mes to make it pass 14mm away⑤ from the looper on the right side.

(above the looper' s ridge⑥)

Loosen the screw④ to make the adjustment.

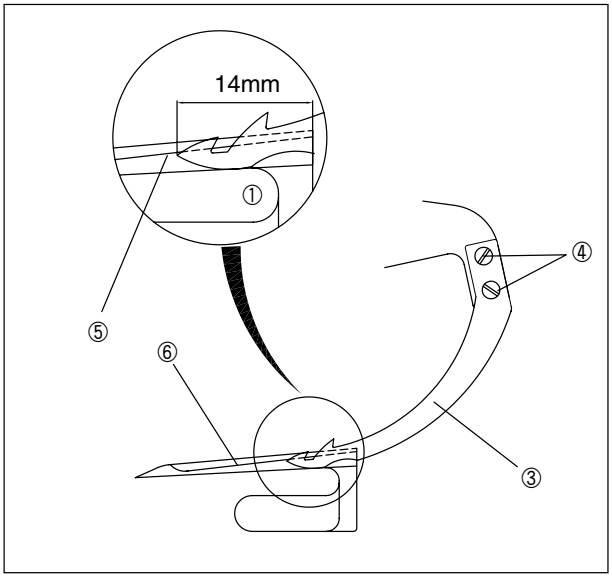

[Figure 75]

[Warning]
Before adjustments, always turn off the motor switch and check to make sure that the motor is in stop mode.

(3) Adjustment of Moving Mes and Needle

a. Loosen the nuts④,⑤.
b. Move the moving mes to the left in full.
c. Use the trimming connecting rod⑥ to adjust the distance between the hook for the needle thread and the left needle at 2.5~ 3.0mm.

- To widen the distance, turn the trimming connecting rod in the "W" direction.
- To narrow down the distance, turn the trimming connecting rod in the "N" direction.

d. Tightly fasten the nuts④,⑤.

Tightly fasten the nuts④, ⑤, and confirm whether the trimming device connecting rod② and the moving mes body③ are operating smoothly.

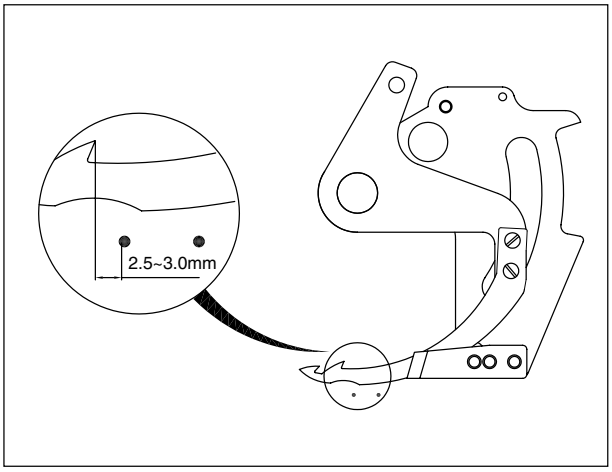

[Figure 76]

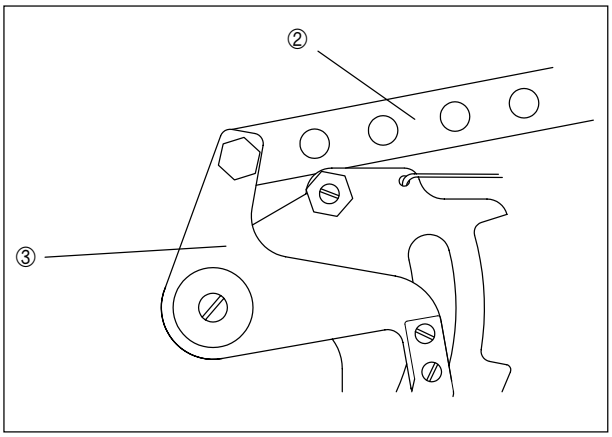

[Figure 77]

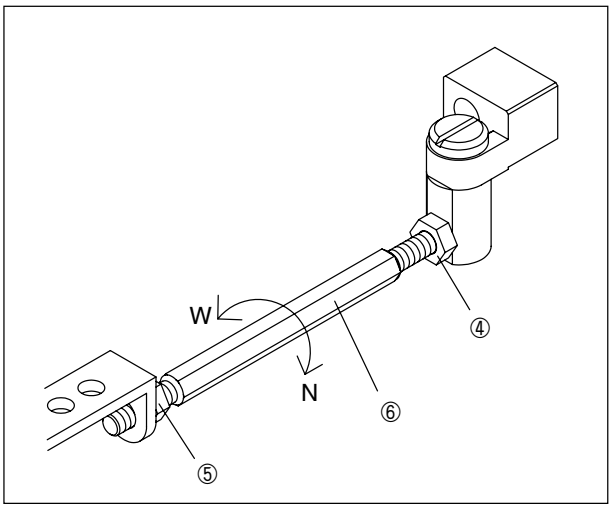

[Figure 78]

[Warning]
Before adjustments, always turn off the motor switch and check to make sure that the motor is in stop mode.

(4) Adjustment of Moving Mes and Looper

When the moving mes① is in motion, the front face of the looper② should be 0.1~0.3mm distant from the rear face of the clamp spring③.
If the distance is inappropriate, the fixed mes might be bent.
If it happens, please straighten it out. .

[Caution]
When adjusting the distance, don't make any changes in the height of the looper.
Any change in the height of the looper might cause stitch skips.

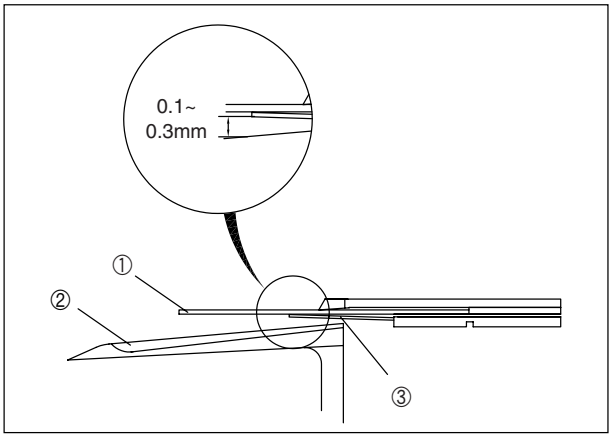

[Figure 79]

(5) Adjustment of Moving Mes, Fixed Mes and Clamp Spring

To make the tip of the hook for needle thread④ pass by the rim⑤(I) of the fixed mes, adjust the tip of the hook for looper thread⑥ to pass by the rim⑦ of the clamp spring. And adjust the inner side of the moving mes to pass by the rim⑦ of the clamp spring.
Loosen the screw⑨ for adjustment.

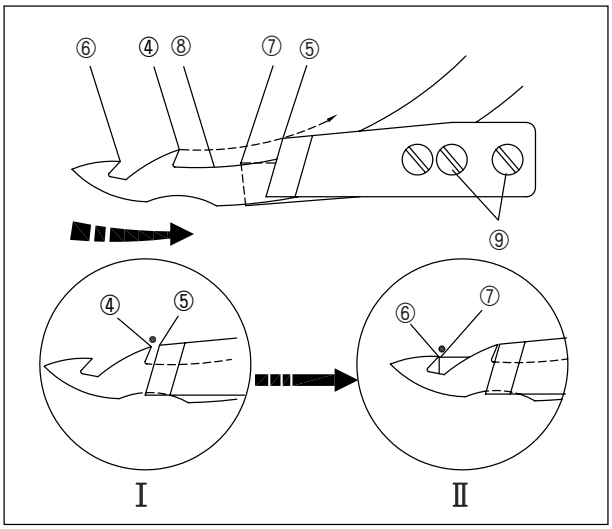

[Figure 80]

(6) Overlapping of Moving Mes and Fixed Mes

The fixed mes⑪ and the moving mes⑩ overlap around 0.2~0.5mm.
When the moving mes moves to the right in full, loosen the screw⑬ and move the hexagonal stopper plate⑫ for overlap adjustment.

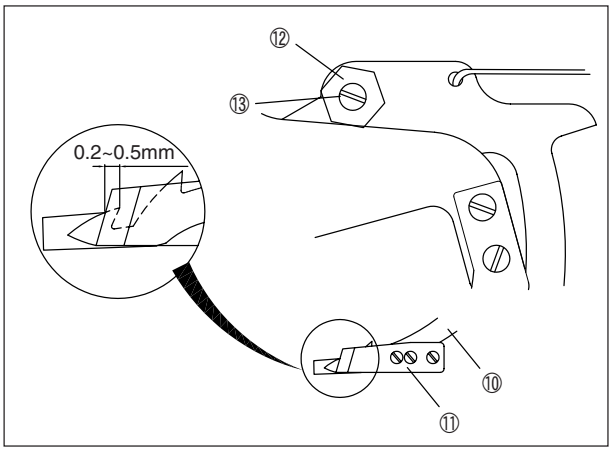

[Figure 81]

[Warning]
Before adjustments, always turn off the motor switch and check to make sure that the motor is in stop mode.

(7) Adjustment of Remaining Thread After Sewing Is Finished

When the trimming device is in motion, the moving mes ① moves to the left and the fixed mes body④ moves to the furthest left of the moving mes return spring.
When the distance between the tip of the clamp spring② and the feed dog on the right side is 0~0.5mm, fasten the screw⑦ to attach the fixed mes stopper(L)⑤ to a part of the fixed mes body⑥.
The moving mes① returns from the furthest left along with the needle thread and the looper thread.
Then it is overlapped with the fixed mes③. The meses cut the needle thread and the looper thread.
Until the threads are cut off completely, the clamp spring ② should be 0~0.5mm away from the feed dog. This position determines the length of the remaining thread after sewing is finished.

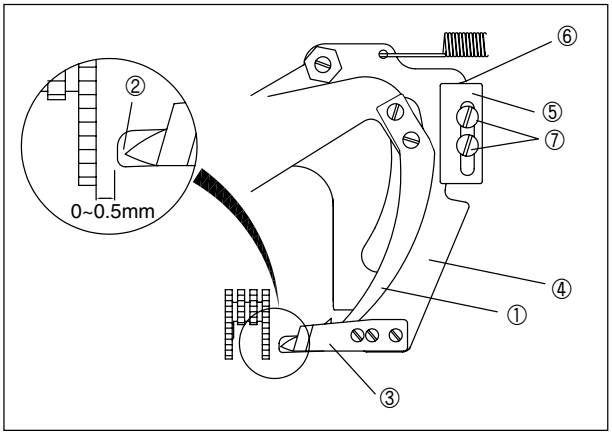

[Figure 82]

- To make the remaining thread shorter, locate the clamp spring on the left side.
- To make the remaining thread longer, locate the clamp spring on the right side.

When the plunger of the cylinder is on the left side, adjust the distance between the blade⑩ of the fixed mes body⑧ and the fixed mes stopper(small)⑪ at 1.5~2.0mm. (If the trimming device doesn't operate) Loosen the screw⑨ for adjustment.

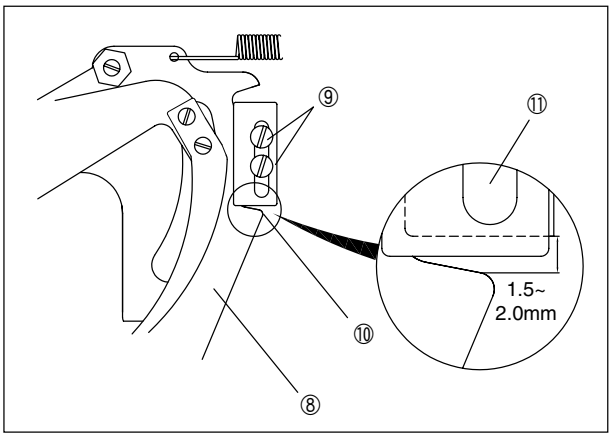

[Figure 83]

(8) Adjustment of Clamp Spring Pressure

The clamp spring holds the looper thread after it cuts the looper thread. Loosen the screw⑫ for pressure adjustment.

- To increase pressure, turn the screw clockwise.
- To reduce pressure, turn the screw counter-clockwise.

Maintain pressure at the smallest level as long as the clamp spring can hold the looper thread.

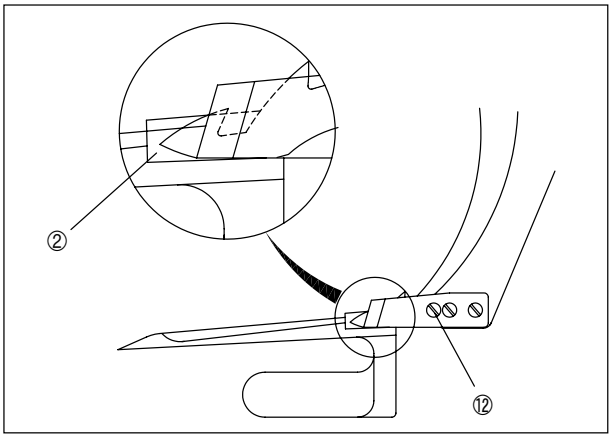

[Figure 84]

[Warning]
Before adjustments, always turn off the motor switch and check to make sure that the motor is in stop mode.

(9) Relation between Moving Mes, Needle Thread and Looper Thread

After all adjustments are made, place the thread properly and check the followings before starting sewing.

- The moving mes① should pass by the inner side of the loopers③, ④. And the tip of the looper hook② should pass in front of the looper thread.

- When the moving mes① returns, the needle thread and the looper thread should be caught by the hooks ②, ⑤ respectively. And the threads should be cut by the fixed mes.

- If the moving mes doesn't operate properly, adjust the distance between the left needle and the tip of the needle thread hook at over 2.5~3.0mm (See [Fig. 76] Adjustment of Moving Mes and Needle.)

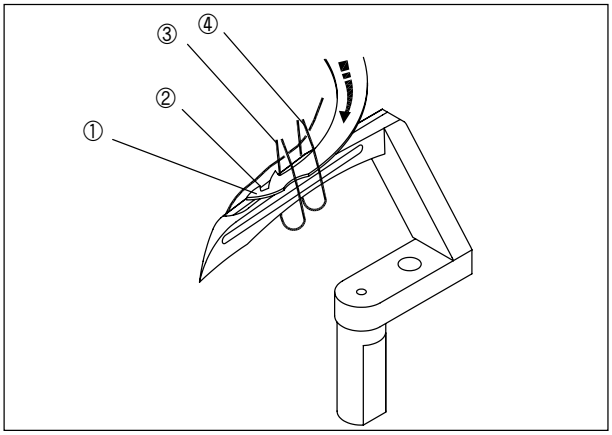

[Figure 85]

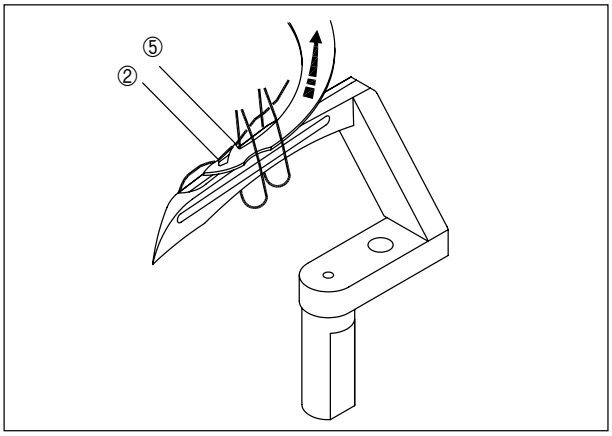

[Figure 86]

[Warning]
Before adjustments, always turn off the motor switch and check to make sure that the motor is in stop mode.

6) Adjustment of thread tension release mechanism

(1) Block for trimming switch guide.

A. Loosen the screw ③.
B. When the rod of the trimming cylinder is at the far left (when the trimming device is not working), adjust the block for trimming switch guide ① to parallel with the rod end ② of the trimming cylinder.
C. Tighten the screw ③.

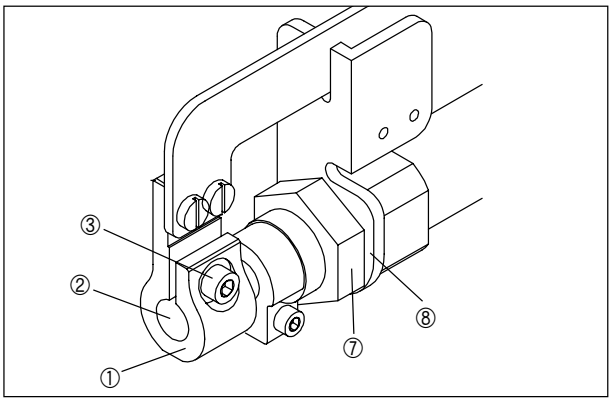

[Figure 87]

(2) Thread tension release connecting plate.

A. Loosen the nut ⑦ of the thread trimming air cylinder.
B. Adjust the holder for limit switch bracket ⑧ to bring the thread tension release connecting plate ④ to come between the screw head ⑤ and the tension release lever ⑥.
C. Tighten the nut ⑦.

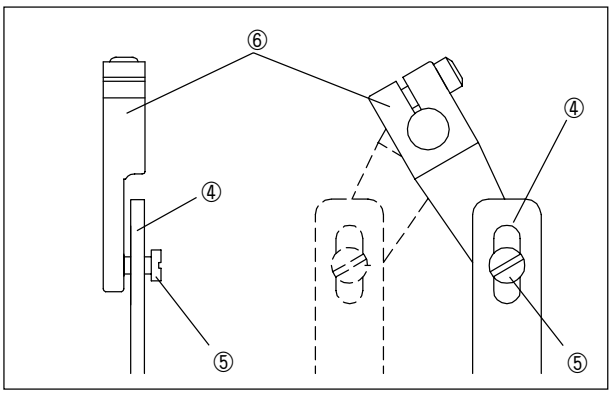

[Figure 88]

(3) Thread pull-off lever

A. Loosen the screw ⑩ of the tension release lever located on the backside of the machine.
B. Lift the thread pull-off lever ⑨ to the top.
C. Tighten the screw ⑩ afterwards.

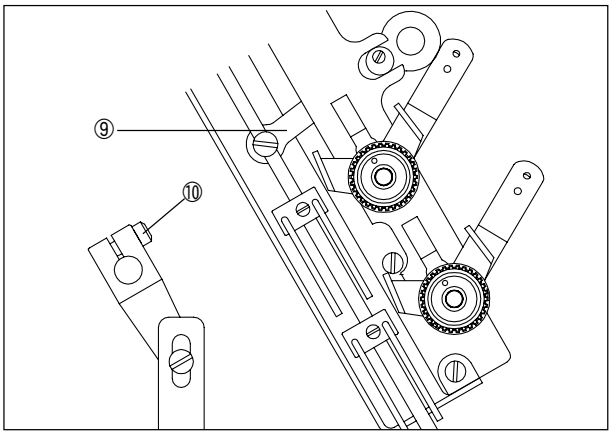

[Figure 89]

[Warning]
Before adjustments, always turn off the motor switch and check to make sure that the motor is in stop mode.

(4) Tension disc separator

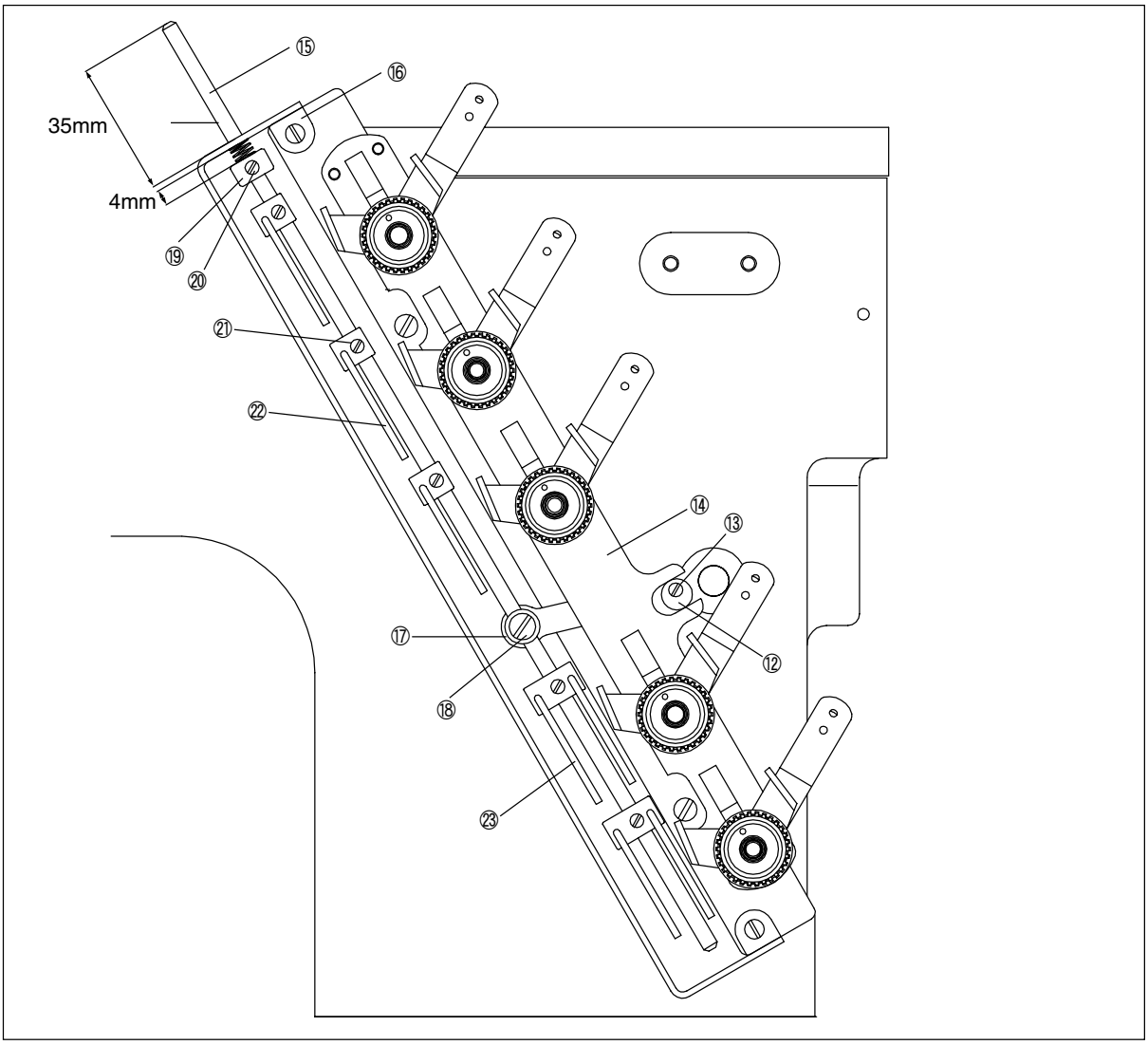

[Figure 90]

A. Loosen the screw ⑬ of the thread pull-off eccentric cam ⑫.
B. Turn ⑫ to position the tension disc separator ⑭ so that the tension disc separator opens as fast as possible.
C. Loosen the screw ⑱ to set a clearance of 35mm between the top of the thread pull-off bar ⑮ and the top of the guide for thread pull-off bar ⑯.
D. With the screw ⑱, fix the thread pull-off bar ⑮ onto the thread pull-off bar holder ⑰.
E. Loosen the screw ⑳.
F. Set a clearance of 4.0mm between the collar for thread pull-off bar ⑲ and the guide for thread pull-off bar ⑯.
G. Fasten the screw ⑳.

(5) Thread pull-off hook unit

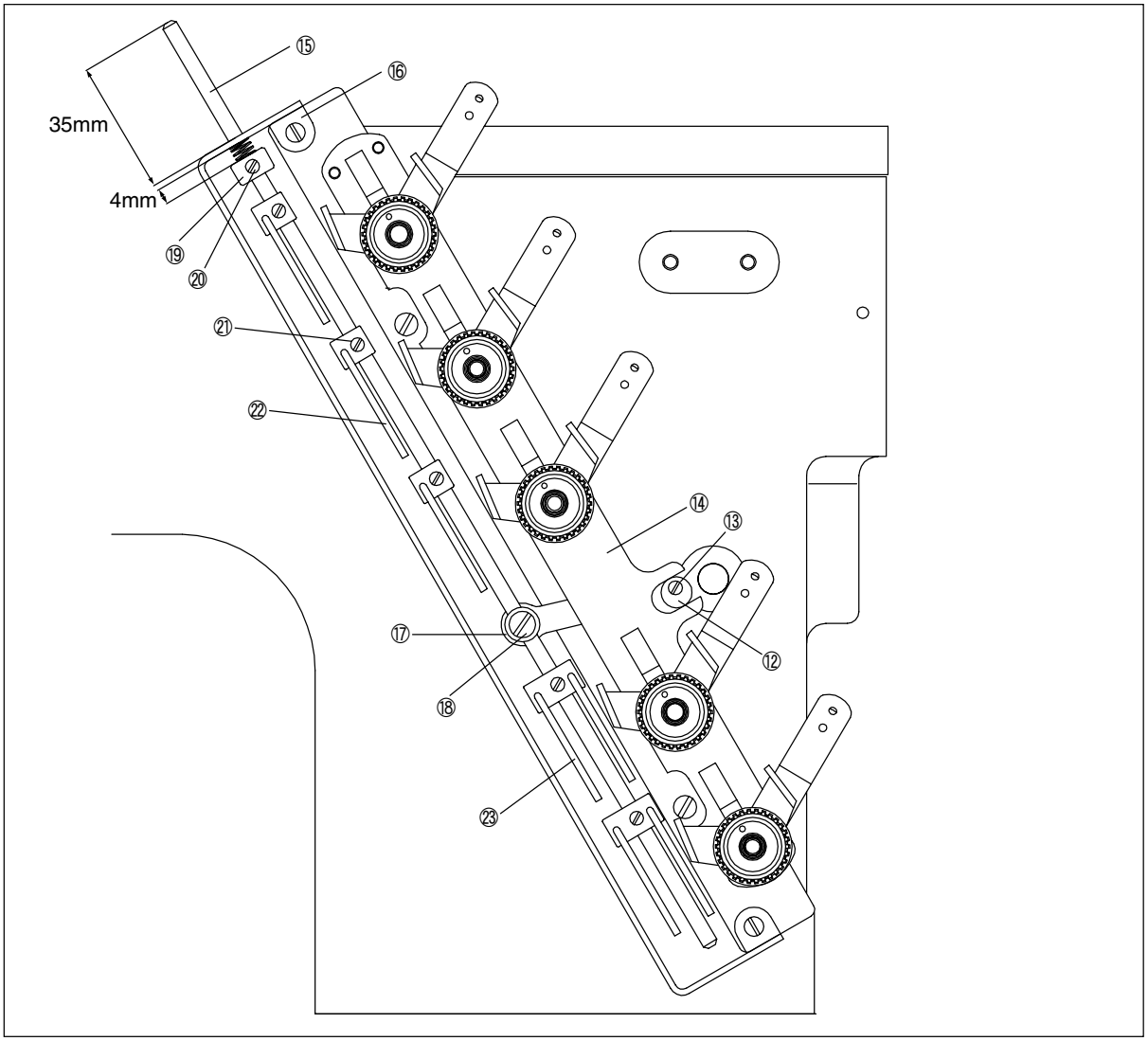

[Figure 91]

The thread pull-off hook unit "A" ㉒ is designed to control the needle thread in the sewing material to the minimum when sewing starts.

A. Loosen the screw ㉑.

B. To reduce the amount of remaining thread, lift the thread pull-off hook unit "A" ㉒. To increase, bring the unit down.

[Caution]

A. Use the thread pull-off hook "B" unit ㉓ only when you are using wool thread for the looper thread. When the thread pull-off hook "B" unit ㉓ is not in use, bring it up so that thread does not get caught.

B. Do not force the thread pull-off hook "A" unit ㉒ up. Stitches may not be formed when the sewing starts.

[Warning]
Before adjustments, always turn off the motor switch and check to make sure that the motor is in stop mode.

7) Adjustment of air wiper

(1) Loosen the screw ③.

(2) Move the air wiper ① front and back so that the air wiper ① operates behind the needle.

(3) Fasten the screw ③.

(4) Loosen the screw ④.

(5) When the needle is at the highest point, adjust the air wiper ① so that the center of the air blowing hole ② is 1.0~2.0 mm lower than the needle groove of the left needle.

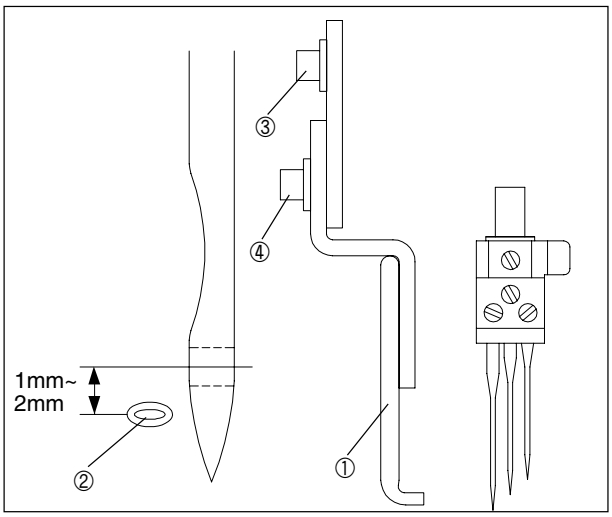

[Figure 92]

(6) Fasten the screw ④.

(7) Control the amount of air with the speed controller ⑤. To reduce the air, turn the screw clockwise and to increase, turn it counter-clockwise.

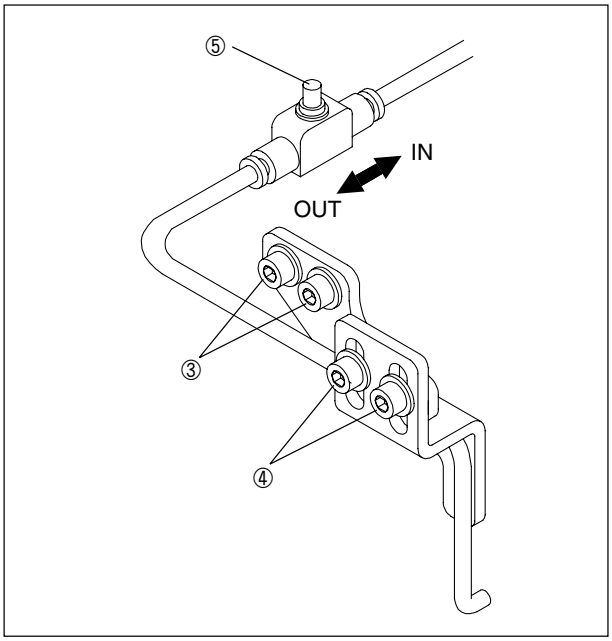

[Figure 93]

[Caution]
1. Keep the air level to the minimum as long as the machine functions well.
2. If air gets out from the needle front, the needle thread may slip off of the needle hole. Make sure that the wiper operates to the backside of the needle.

[Warning]
Before adjustments, always turn off the motor switch and check to make sure that the motor is in stop mode.

8) Presser foot lifter mechanism

(1) Unfasten the nut ②.
(2) When the knee-lifting air cylinder rod ① is at the lowest point, turn the knuckle for knee-lifting air cylinder ③ to bring up the presser foot by 5mm (7mm).

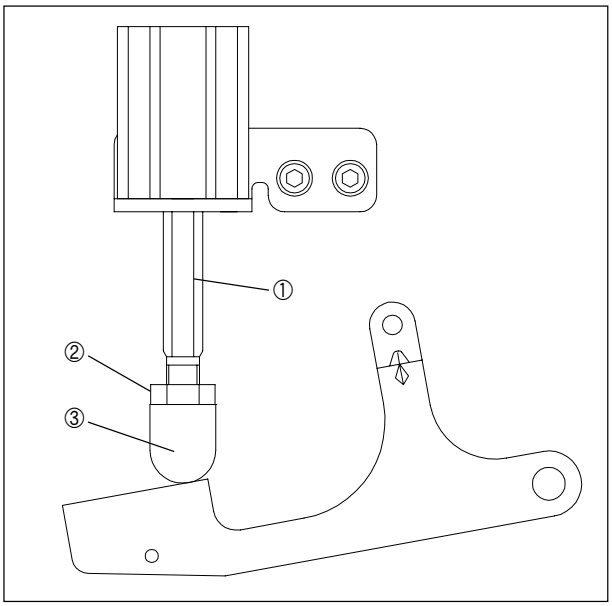

[Figure 94]